MaxFlight
FS2000(B)
"ELECTRIC"
Flight Simulator Manual

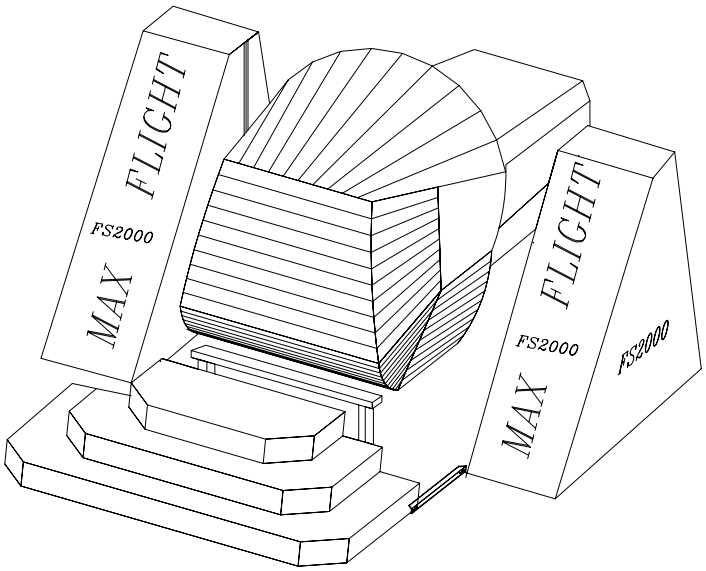

FS2000(B) Flight Simulator Directory

TABLE OF CONTENTS Technical

TABLE OF CONTENTS INSTALL

MaxFlight
FS2000(B)
"ELECTRIC"
Operators Manual

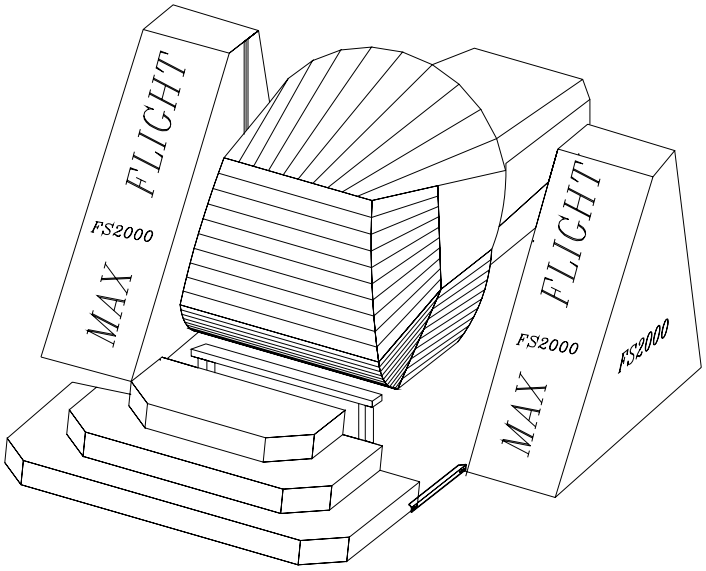

CHAPTER 1 – INTRODUCTION

1-1 Introduction to the FS2000(B)

Welcome!! And thank you on your purchase of the FS2000 Flight Simulator. The FS2000 is the only full motion, interactive, networked experience of it's kind. This is a dual seat combat fighter based on a virtual reality environment with a full 360 degree, 2 axis motion platform. The experience time can be varied according to patron demand; the standard time set is 6 minutes. You can link up to ten simulators at a time with the patrons operating in teams or individual play.

1-2 Overview of the FS2000(B)

The FS2000 is a computer driven flight simulator that provides a realistic aircraft combat environment. The customer can operate the system as an amateur to gain experience and then progress up to a professional fighter ace. This system allows for the feel of actual flight without the strain of experiencing the damaging G-forces.

1-3 Safety

Due to the nature of the FS2000 there are several safety precautions that must be observed in order to ensure the safety of both the patrons and the operators during the operation of this experience.

1-3A Loading/Unloading Safety

During the loading and unloading of patrons, the operator must ensure the simulator has come to a complete stop prior to lowering the unit and opening the cockpit canopy. The operator is required to assist the patrons negotiate the platform and cockpit.

1-3B Queue Line Safety

The queue line must be kept orderly. The patrons must remain behind the established barriers while waiting their turn to fly. The queue line should also be used to familiarize patrons with the safe operation of their flight simulator as well as the game selections.

1-3C Canopy Operation

When opening the canopy, rotate the locking knob, open the latch and allow the canopy to rise under its own power. DO NOT force the canopy up, as this will destroy the seals and the lift arms.

1-3D

Ensure that the cockpit has completed movement prior to continuing with any other procedures.

1-3E

Ensure that during any time the electrics are enabled, people stay clear of the simulator to prevent injury due to the movement of the simulator.

1-3F

Ensure that operating personnel do not operate the simulator with any of the cover plates removed.

1-3G

Ensure that only authorized personnel open the electrical power box for any reason.

1-3H

Ensure that patrons pass the height and weight requirements to operate the simulator.

1-3I

During the operation of the simulator the operator must stay within the proximity of their assigned units. Operators must watch for such things as equipment failure, abuse of the simulator and customers who wish to terminate game play.

CHAPTER 2 – OPERATION

2-1 Description of Motion During Operation

There are three basic axes of motion that the simulator travels on, Pitch, Roll and vertical lift into the game position. When used in accordance with the procedures outlined in this chapter, the FS2000 Flight Simulator will provide hours of trouble free operation.

2-1A The Pitch Axis

The pitch motor is a 5 HP 208/380/480/3 phase VAC drive motor. Controlled by the frequency drive inverters. The pitch axis will rotate the cockpit in either a clockwise or counterclockwise direction. The maximum velocity the pitch axis will produce is 90 degrees per second.

2-1B The Roll Axis

The roll motor is a 3.0 HP 208/380/480/3 phase VAC drive motor. Controlled by the frequency drive inverters. The roll axis will rotate the cockpit in either a clockwise or counterclockwise direction. The maximum velocity the roll axis will produce is 90 degrees per second.

2-1C The Vertical Lift System

The Lift motor is a 3.0 HP 208/380/480/3 phase VAC drive motor. Controlled by the frequency drive inverter. The vertical lift system raises and lowers the main assembly into the load and ride positions.

2-2 System Startup Procedures

The procedures listed below must be followed to ensure the simulator operates in a safe condition.

1. On the left "A" frame, turn the power switch on the power strip to "ON". This will power up the following;
    a. Projector power
    b. Wireless network receiver power (When Installed).
    c. Network switch power.
    d. Television power.
    e. On-board computer.
    f. On-board amplifier.
    g. On-board TV elite video signal splitter.
    h. All cooling fans in the cockpit and drive motors.

Units with separate command console perform the following;

2. In the command console, turn power strip on bottom to "ON".
3. Power up the Battery Backup unit, press switch in on right top side. Green light comes "ON". The monitor will come on automatically.

Units that have built in command computer within the "A" frame do the following;

4. Press the power on button on front of computer and allow unit to come up to desktop.
5. Power up any stand ups if needed or applicable.
6. Turn projector bulb on by aiming remote towards mirror and pressing green "ON" button once. Bulb comes on and gets brighter over next few seconds.
7. Pull out the red E-Stop button on side or front of command console to power up Inverters.

8. Double click on FS2000 or MFS2000 icon, this will start the on-board program and initiate the program window on the command console computer.
9. Click on New Game, select Single player, click OK (on FS2000 program) or just New Game for MFS2000 program, this loads the program into memory.
10. Click on Isles of Day or Night, click OK (FS2000 program)
11. The program will load. You are now ready to use the machine in normal mode.

NOTE! For those machines that have the MFS2000 program there are less steps in initialization.

NOTE: The bird and an alert window will open while the inverters are powering up and the communication path between the CPU and power box is established. If all is well, the bird and window will close. If there is a problem, another alert window will come up stating the problem. Correct all faults before running/starting any other program.

2-2A Description of Control Windows and Icons

A. Desktop Displays on command console.

- "**FS2000"** or **"MFS2000"** icon- shortcut to the actual program, double clicking it will initiate the program.
- "**Mitsubishi Inverter Test"** icon- shortcut to the manual test of the inverters in all axes. This is the icon used for the emergency raise procedure or maintenance functions only.
- "**Mitsubishi Test Client**" icon- shortcut to the semi-automatic maintenance test program of the platform.
- '**Game Log**" icon- shortcut to the recorded game log.
- **"Start**" icon- lower left, initiates system shutdown or other internal CPU functions.
- "**VFD"** icon- shortcut to the Inverter Frequency Control Setup and Test Program.
- **"VNC"** icon- allows access to the on-board computer or any other computer on the network when proper serial number or IP address has been entered. Access to the computers is controlled by a password. Proper password must be entered or access is denied.
- **MFFS2000** new MaxFlight originated Flight Simulator Program F-18 aircraft.

B. Game Program Windows and Icons. (Found on the on-board computer) when changing settings or VNC's to command console computer during normal operation.

1. FS2000 Program Window

a. "**New Game**" opens game setup window
   (1) Game Setup Window
      (a). **Single Player**- select if no remote viewer is used
      (b). **Multiplayer Host**- select if remote viewer is used
      © **Multiplayer Client** – select only if setting up remote viewer CPU
      (d) "**OK"** select and go to next window

b. Track Setup Window
   (1) **Isles of Wright**– Daylight flight operations
   (2) **Isles of Wright at Night** –Night time flight operations
   (3) "**OK**" goes to next window

c. **Loading Play Area Window** – loads selected scenario into CPU RAM for play

d. **New Player"** icon – opens type and time selection window
   (1) **Select Track** if change takes @ 2 minutes to load
   (2) **Select Time** - default is 3 minutes, can be changed as desired
   (3) "**OK**" goes to next window

e. Top Row Indicators
   (1) GAME

STOP – stops selected program
QUIT – shuts selected program down completely, clears memory

2. **"FS2000 Base Lift Control"** window
    a. **Raise** icon – allows the platform to raise, balance normal and go to the top.
    b. **Stop** icon – stops motion of the platform at any point.
    c. **Lower** icon – allows the platform to lower to the normal steps level .

3. "**MFFS2000"** icon—double click on this and it will start the F-18 flight simulator program
    a. Control window will open, motion control will initiate.
    b. "**New"** icon—press this will load software on on-board computer
    c. **"New Player"** starts new game. Opens another window where you select time and aircraft.
    d. **"Stop Player"** stops flight program and returns platform to home level position.
    e. **"Top Row Icons"**
        (1) **"Game"** when selected then STOP shuts game down to desktop so you can load new different scenario.
        (2) **"Quit"** when selected, completely shuts down flight sim program and clears memory.
        (3) **"Demo"** when selected allows you to select the type of demo program you desire to run.
            a. **Mild** platform wiggles a little in roll axes but does not do complete pitch loops.
            b. **Wild** platform does complete loops in roll and pitch.
            c. **Continues Flight** demo goes on until stopped by operator.

4. **"MFFS2000 Base Lift Control"** window
    a. **Raise** icon – allows the platform to raise, balance normal and go to the top.
    b. **Stop** icon – stops motion of the platform at any point.
    c. **Lower** icon – allows the platform to lower to the normal steps level .

2-3 Description of Passenger Restraint System

There are two restraint systems employed for passenger comfort and safety, a primary and a secondary.

2-3A Primary Restraint

The primary restraint system is similar to an Airline safety belt. It simply pulls around the passenger and plugs into the receptacle. It is then tightened with the pulling of the strap.

2-3B Secondary Restraint

The secondary restraint system consists of a molded structural steel bar shaped to fit the passenger. The bars are covered with padding and vinyl covers for passenger comfort. There are safety sensors incorporated, in that if restraint is accidentally released, will stop the motion instantly and return the platform to the home level position. To operate, lower the harness to the patrons comfort, check to verify that the new crotch restraint belt is fastened and tightened.

2-3C Crotch Belt System

This service bulletin will be issued and once complied with will add a crotch belt to the shoulder restraint system. A micro switch sensor, will be incorporated so, that when the belt is tampered with, will stop the motion on the platform immediately, return the platform to the home level position. The only action the operator can take is lower the platform to the loading level.

2-4 Height and Weight

Maximum total weight for the ride is 500 lbs. Minimum height requirement to ride alone is 48 in. (1.22 m) or 42" (1.1m) if accompanied by a responsible adult.

2-5 Game Selection and Play

2-5A National Air and Space Museum (NASM) has special requirements. These are;

1. **Auto pilot** program must be selected prior to machine setup. This is the X-plane video flight 3 minutes in duration.
2. **Interactive** fly yourself, can be either:
    a. Microsoft instant combat any aircraft and location usually used during special events and group play.
    b. X-plane flight simulator no combat, just flying and landing per real plane scenarios.
    c. Mondo Bizzaro, flight and fight program, allows shooting at targets and other planes.

Patrons should be encouraged to make their game selections while waiting in the queue line. If the customer is the only one flying, Single Player game should be selected. To network more than one unit (Dog Fight), select the Multi System Host or Client**.**

2-5B New MFFS2000 Flight Simulator Software package

This program is based on the F-18 fighter aircraft. Totally interactive as the other flight programs. The main program runs on the on-board computer with motion sent to the command console computer for platform motion. The program is initiated by double clicking on the MFFS2000 icon on the command console desktop. The software package will load on the on-board computer and then the program window will open on the command desktop along with the motion lift control window. Select new , state OK and program is ready to play. Loading/unloading passengers, raising and lowering, starting game is same as others above and below in para. 2-10.

2-6 Customer Pockets

The attendant **must** ask each patron if they have any objects in their pockets that could come out during the ride. If so, remove and place the items in a secure container for the duration of the ride. Be sure to remind patrons at the end of their ride to retrieve their possessions.

2-7 Recommended Passenger Loading Procedures

Assist the passenger into the cockpit and ask them to put on the primary restraint **(the seatbelt).** Lower the restraint harness until it is snug against the waist and chest, buckle the crotch belt system.

Render any assistance or instructions required. This is a good time to give the patrons instructions on how to use the Occupant Panic Switch and the controls/operations of the flight control joysticks. The flight controller joystick controls the direction that the simulator will move. Moving controller to the right will cause a roll to the right. Left the opposite direction. To pitch up, pull the controller back. To go down, push the controller forward. The center stick is the throttle. Moving forward, increases speed, rearward slows you down.

After it has been explained, they should be asked if they understand how to use these items. Close the canopy and secure it with the locking devise and install the safety strap.

2-8 Flight Control Stick Operation

While the game is in progress, the flight control stick (right controller) will operate the direction that the simulator will move. Moving the controller to the right will cause a roll to the right. Moving the controller to the left will cause a roll to the left. To pitch the unit up, pull the controller back and to pitch the unit down, push the controller down.

NOTE: There are two joysticks and two throttles on this ride. One, the left one starts the ride as the "PILOT". The right joystick starts the ride as the "GUNNER". These functions can be switched by pressing the TOP SIDE BUTTON on the throttle stick. It can also be changed back again by pressing the button once more.

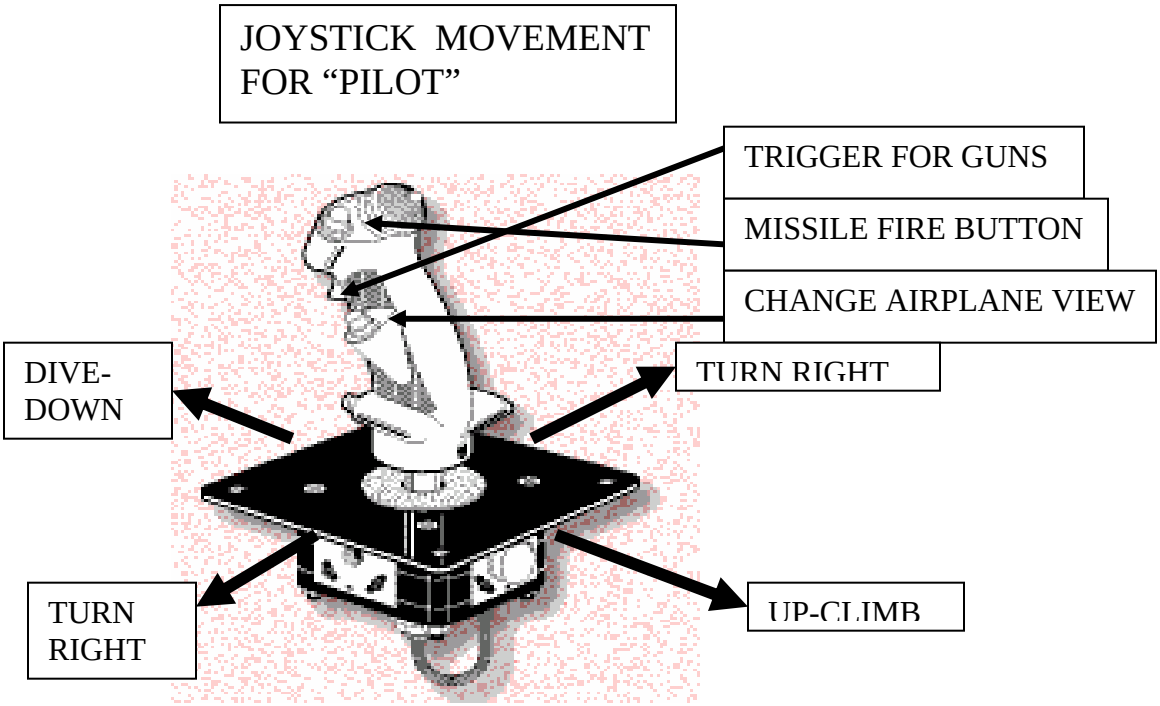

NOTE! Moving the Joystick in the direction of the designated arrows makes the machine/platform move in that direction

2-8B Emergency Stop Button

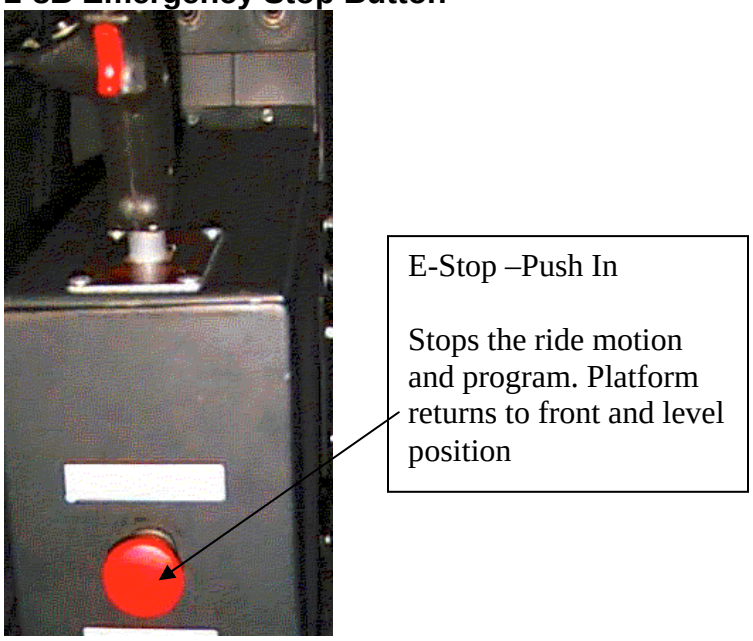

2-9 Throttle Control Stick

The throttle control stick controls the speed of the simulator. Pushing the throttle forward increases the speed of the flight and pulling the stick back will decrease the speed. Depressing the trigger will enable the air brake mode. The more throttle the is retarded while depressing the air brake the faster the airplane will slow.

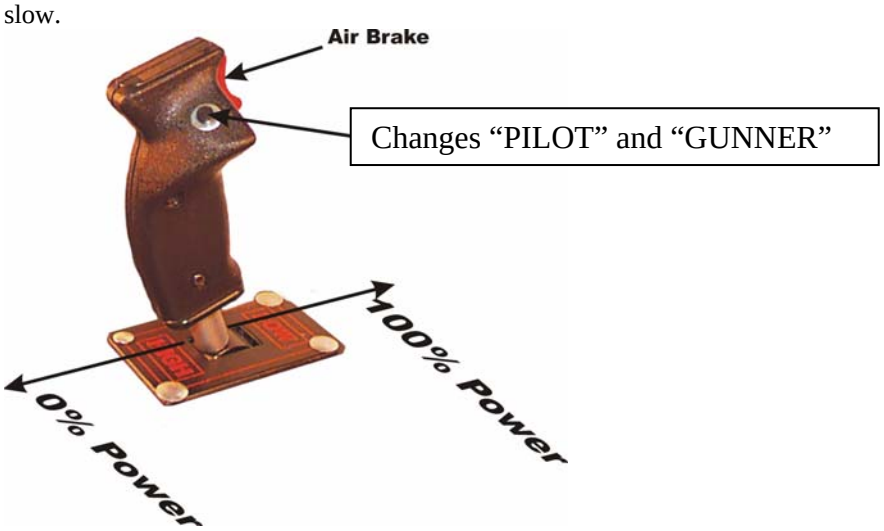

2-9A Black Thumb Button

The black thumb button changes pilot and gunner positions as many times as depressed.

2-10 Game Start Procedures

2-10A Initial Game Startup for Mondo Bizzaro

1. Double click on "**RemoteFS2000**" icon and the program will initiate on the on-board computer, opens the program window on the command console desktop.
2. Click on "**NEW GAME**" another selection window opens up.
3. Click on **SINGLE PLAYER** – if remote viewer is not used or only one is flying.
   MULTIPLAYER HOST – if remote viewer is used or if games are networked.
4. Game Setup window opens, select either **Isles of Wright or Isles of Wright at Night.** Highlight by clicking on selection the click "**OK**"
5. CPU loads the game data and opens the FS2000 start picture on the projector screen and wall projector (NASM). The program control panel window will open on control console.
6. Select "**NEW PLAYER**" Time default is 3 minutes but can be changed.
7. Enter players "NAME" if so desired or
8. Select "**OK"**
9. Raise the platform to the run position. Click **RAISE** lower right window. Game starts and **"STOP PLAYER"** highlights.

2-10B Initial Game Startup for "Auto-pilot Program"(NASM)

1. Double click on "**Remote X-plane" Mitsubishi type icon.**
2. Click OK to open program
3. VNC into the on-board by double click on remote VNC icon
4. Double click on X-Plane icon and wait for the program to load
5. Click on square box upper left to initiate settings and program
6. Click on upper right X to close remote VNC and get back to command console
7. Select full window on program windows
8. Depress pause/continue button to halt program to stand bye
9. Game is now ready to play and run customers

10. To raise unit to the play position click on raise icon top left, unit raises, balances and goes to the top closes upper limit sensors and starts the program
11. Click on **Read data**
12. Click on **Pause/Continue** button
13. Click on **Run Motion** button

2-10C MFFS2000 F-18 Flight Program Startup Procedures

1. Pull the **E-Stop** power control button out. This powers up the inverters.
2. After power has been applied to all computers and they are up to desktop double click on **"MFFS2000"** icon on command computer. This will start the motion command program on command computer, on the on-board it will initiate the flight simulator program.
3. The control panel window will open;
    a. Click on **New Game** this will load the software into memory on the on-board computer. Control window will state **Loading.**
    b. When all is ready control window will state **On Available.**

4. Load passengers and explain controls. Close and latch cockpit.
5. Click **New Player** , this opens another window where you can select time and aircraft. Time is defaulted to three minutes. Aircraft is defaulted to F-18. Click **OK.**
6. Click on **Raise** icon. Machine will raise, balance then continue to the top. Program will start after computer sees the left and right up sensors. Timer will automatically stop the program.
7. When program is ended, machine is in home level position and no further motion, click on **Lower** icon, this will lower the platform back to loading/unloading position. Open cockpit allow passengers to exit. Reload and you are ready for next flight.
8. To stop flight at any point click on **Stop Player** icon. Machine stops and returns to the home level position and **Lower** icon hi-lites.

2-10D Starting "X" Plane program

ALWAYS MAKE SURE THE X-PLANE CD IS IN THE DRIVE BEFORE STARTING THE PROGRAM.

1) When X-Plane is first started, you will see the "Set Quick-flight Options" screen.
2) Click "Enter ID" and enter KRAL for the airport identifier
3) Un-check "Open this Quick-Flight window at every startup"
4) Click "Open Aircraft". Navigate through the folders to select the F-15 Eagle
5) Set the time to 12:00 noon local.
6) Click on "Select this airport"
7) When the program starts, Select File menu, Save Situation.
8) Save the situation as DefaultStart.sit. Use this situation every time you start X-Plane thereafter, by using the Load Situation option under the File Menu
9) Under Settings menu, select Data Output.
10) check the leftmost button for [Throttle setting (neg in rev)]
11) Check the leftmost button for [pitch and roll]
12) Check the leftmost button for [lat, lon, altitude]
13) Exit out of Data Output screen by clicking square in upper left or right corners
14) Go to Settings menu and select Internet connections
15) Select IP address of motion platform. Enter static IP address of command console and port number 49000
16) Select IP address of data receiver. Enter static IP address of onboard and port number 49001.
17) Set Data Rate no greater than 30.
18) Exit out of screen by clicking square in upper left or right corners
19) Go to Set Joystick Axis. Set all axes to none.

Operation of the program:

==========
ALWAYS MAKE SURE X-PLANE CD IS IN THE DRIVE BEFORE STARTING THE PROGRAM.

1) On the COMMAND CONSOLE, start the Motion Client for X-Plane.
2) On the Onboard, start the MFXPlane program. If the joysticks are active you will see their vales change onscreen as you move them. Ranges should be approx. +/- 10000.
3) Start the X-Plane program.
4) You should see the Internet connections screen after X-Plane finishes loading.
5) The IP address and port settings should not have changed from the last operation of the program.
6) Exit out of screen by clicking square in upper left or right corners.
7) Once program starts, there should be an F-15 at Riverside Municipal (KRAL).
8) If not, Load the DefaultStart situation by selecting Load Situation from the File Menu.
9) Pause the program by clicking on the Pause/Continue button on the Motion Client window on the command console.
10) A Pause message should appear on the X-Plane program window and the program should suspend all actitvity.

NON-INTERACTIVE MODE:
1) Make sure the Non-Interactive button is checked.
2) Select either Mild or Wild from the drop-down list.
3) After occupants have been secured within cockpit raise the unit by clicking the Raise button.
4) After the unit is raised click on Start Reading Data.
5) If the X-Plane program is in a paused state (which it normally should be) click on Pause/Continue to continue. The X-Plane program should become active.
6) When the Run Motion button becomes active, press it to start the unit moving.
7) After the ride completes, press the Lower button to bring the unit back down.
8) Repeat steps 1 - 7 as necessary.

INTERACTIVE MODE:
1) Make sure the Non-Interactive button is un-checked.
2) After occupants have been secured within cockpit raise the unit by clicking the Raise button.
3) After the unit is raised click on Start Reading Data.
4) If the X-Plane program is in a paused state (which it normally should be) click on Pause/Continue to continue. The X-Plane program should become active.
5) When the Run Motion button becomes active, press it to start the unit moving.
6) After the ride completes, press the Lower button to bring the unit back down.
7) Repeat steps 1 - 7 as necessary.
8) If the occupants are unable to successfully perform a takeoff or become immobile on the ground for any reason you can manually reset the aircraft back to a starting position on the runway by pressing the "Reset - if aircraft crashes" button. Press the Run Motion button to the unit moving once the plane is again back on the runway.
9) If the occupants crash the aircraft severely enough, X-Plane will automatically reset the aircraft back to the runway. If X-Plane automatically resets the aircraft to an airport other than KRAL, load the DefaultStart.sit situation before starting another flight.

THEORY OF OPERATION:
==========
- All motion activity is controlled by the command console computer. The Motion Test Client program interfaces with the MFMotion server running in the background which handles all access to the motion system. The interface provided by the MFMotion server consists of lift commands (raise/stop/lower) and motion commands (start/run/freeze/stop/setPitch/SetRoll). On the Motion Test Client window these commands are represented by labeled buttons and sliders.
- The X-Plane controls of the Motion Test Client program combine the motion interface with an interface to the X-Plane program running on the Onboard program. The Start Reading Data button initiates an active motion session by calling the Start command of the MFMotion interface. It also opens a windows socket

for intercepting packets of data being output from the X-Plane program. Conversely, the Stop Motion button calls the Stop command of the MFMotion interface and closes the windows socket which is polling for packets of data from X-Plane. The Pause\Continue button sends a keyboard command (the letter "p") from the command console to the X-Plane program running on the onboard program. The X-Plane program is configured to recognize the letter p as a command to alternately pause and continue the program. The MFMSFlight DCOM module installed under \WINNt\system32 is reponsible for sending keyboard commands from the command console to the onboard computer.
- The MFXPlane program which is run on the onboard concurrently with the X-Plane program is responsible for reading the joysticks and sending their data to X-Plane. Because the X-Plane program has no inherent functionality to switch piloting functions from one set of controls to another, the MFXPlane program is an interface to the X-Plane program which provides for this functionality. The program will recognize the first two DirectInput joystick devices installed on the system as Joystick 0 and Joystick 1 respectively. Depending on the state of a user-assignable joystick button, only one of the joysticks will have its data sent to the X-Plane program at a time. The MFXPlane program will also send commands to the X-Plane program to automatically raise/lower landing gear, extend/retract flaps and apply/release brakes. The gear and flap activity is triggered by a user-assignable altitude setting. The brakes are triggered by throttle position, with full throttle releasing the brakes and anything less then full throttle applying the brakes.

IMPORTANT CONSIDERATIONS:
==========
- The reset function (placing the aircraft back to a starting position on the runway) is dependent on location. The starting location of the aircraft should always be Riverside Municipal Aiport (identifier KRAL). A network "snapshot" data structure designed to allow control of aircraft over a network is being used to send to X-Plane an initial starting state for an aircraft. For optimization purposes the resolution of the location data specified in the snapshot structure is not accurate enough to allow exact placement of the aircraft relative to a given lat/lon. Consequently, X-Plane will automatically resolve the location of the aircraft to any number of airport locations within a certain area. The KRAL location has been found to provide a consistent starting place to which X-Plane will almost always resolve the aircraft's position after a snapshot has been sent. Also, the recorded flights (mild and wild) used for the non-interactive flights were recorded at the KRAL location. A different location with higher elevation terrain may create the potential for ground collision. Always make sure any flight is started from KRAL for these reasons. The DefaultStart situation may be loaded at any time to place the aircraft at KRAL.
The intent of the snapshot structure does not coincide with its usage in the context of MaxFlight operation. The purpose of the structure is to allow independent developers to create network applications for the external control of the X-Plane program. The use of the structure for the purpose of resetting the simulation to some arbitrary state was not intended and is therefore inherently flawed. The main disadvantage to using the snapshot for the purpose of resetting the simulation is that is optimized for limited network bandwidth thus restricting the accuracy of the data contained within it. Most notably, the location of the aircraft is specified by a latitude/longitude code with an accuracy to only minutes rather then seconds. The consequence is that the location of the aircraft may correlate to several different airports for a given lat/lon reference code. X-Plane automatically resolves the airport location of an aircraft based on the given lat/lon ref code. Experimentation has shown that one location in particular will be chosen by X-Plane on a consistent basis, given the aircraft's relative distance from that location at the time a snapshot structure is sent to X-Plane via UDP. That location is Riverside Municipal airport in CA, with identifier KRAL.

2-10E Starting the Microsoft Combat Flight Sim 2

1. VNC to on-board computer
2. Start the MFCombat Sim controller interface program. Verify controllers respond by watching value changes.
3. Start on-board Microsoft Combat 2 program and allow to load.
4. When program is loaded and you see a icon column on right, close VNC to on-board.
5. On command computer, open the MF Motion for Combat Sim2. When program is open;
    a. Select “Server” click “Connect”, verify connected shows in status window.
    b. Select “Options”, click “Settings”

c. Under Mode select either Quick Combat go and start flying and shooting, or Free Flight start on the ground, taxi and take off.
d. Under Player Aircraft, select the type of craft you want to fly
e. Under Enemy, select whom you want to fly against.
f. Under Location, select the area you want to fly around in.
g. Click "OK"

6. Load passengers and give briefing as to controls.
7. Click "Fly Now", machine will initialize the program, start raising, balance and go to the top.
8. When at the top, click "Continue" and the people are now flying the plane.
9. Program will run time limit and stop. After stop, home position, click on "Lower" icon to lower platform down.
10. Open cockpit and allow passengers to exit. Repeat with new passengers steps 7 to 10.

To Close Combat Flight Sim.

1. Lower platform all the way.
2. Close out Command computer program, X top right.
3. VNC to on-board, click on shut down, then click X top right corner.
4. Click X top right on joystick program
5. You are now clean back to desktop.

2-10F Raising the Unit

Ensure that power is applied and normal program is loaded. Go to the LIFT CONTROL, click on the **"RAISE"** icon. The unit will come up about two (3) inches and stop to balance. Upon completion of balancing, the unit will continue raising up to the upper limit switches. If the unit does not balance within one (1) minute, lower the unit and retry.

NOTE: The weight limit is 500 pounds.

2-10G Game Start

Game will start when normally raised to the top after a game is selected. See Para. 2-10 above. When the platform reaches the upper limit switches the CPU will enable the program and full motion is enabled.

2-11 Game Over

When the time runs out, the game window timer will be zero, the **"LOWER"** icon will highlight. During this time the unit will return to "**HOME POSITION".** After unit has stopped moving, click on the "**LOWER"** icon this will lower unit to the stairway. Once all movement has stopped, discharge the patrons.

2-12 System Shutdown

At the end of the operating day, follow these procedures to ensure that the simulator is safely secured for the day.

1. **Lower** the passenger **restraint harness** to the down position.
2. **Lock** the **seat belts** together.
3. Leave canopy open, this verifies machine is empty during any emergency's or simulated emergency drills.
4. Press the **E-Stop** on side or front of console **IN.** Removes all motor power and locks the brakes.
5. Turn all projectors **OFF** by using remote point to mirror and double click the power button on remote. This turns the projector lamp **OFF** and allows the unit to cool down protecting the lamps.
6. Press **CLOSE** icon lower left middle. This will shut program down automatically. Or if that icon is not there
7. Select **GAME** top left
8. Select **STOP**
9. Select **GAME** again

10. Select **QUIT** program is now completely terminated
11. **For programs other than FS2000 and MFFS2000 to shut down on-board computer and programs running;**
    a. **VNC** to on-board
    b. Select File or program running
    c. Select appropriate shutdown icons for that program.
    d. Select **START** lower left
    e. Select **SHUTDOWN**, select **Shutdown** again, on-board turns **OFF**
12. Select **START** lower left on the command console
13. Select **SHUTDOWN,** then select **Shutdown** again
14. Select **OK**
15. After CPU has shut down and monitor is off press **Main Power** switch on power strip to **OFF**
16. Turn the **UPS** power switch to **OFF** green light out
17. Turn **Cockpit** power **OFF** on power strip.

The system is now secured.

2-13 Emergency Stop Procedures

In the event of an emergency follow the procedures described below for the type of emergency.

2-13A Occupant : Using the Panic Switch located inside cockpit

NOTE! When activated, a red dot will appear on right side of motion control window.

During the ride the patrons have the ability to initiate a ride abort by depressing the **Occupant Panic Switch.** Located between patrons on front of center console. When this switch is depressed the ride will return to the "**home"** position, the video projector will freeze and the sound will stop. Once the unit is level, lower the unit by clicking the **"lower**" icon on the computer screen. When the unit is completely lowered onto the stairway, open the cockpit door, discharge the passenger following the Passenger Unloading Procedure. A new ride sequence must be initiated.

2-13B Emergency Termination Procedures: Fire Alarms, Bomb Threats etc.

In the event of an emergency not involving the simulator directly, click on the '**PLAYER STOP"** icon on the screen. Wait for the unit to level, and then lower the platform as normal. In the event that the unit is not responding to the commands, use the Red **EMERGENCY STOP BUTTON** on the side of the Command Consol to terminate power to the electric motors. The unit will then have to be **leveled** and **lowered** manually as described in **section 2-13D**. Assist the patrons out of the simulator and direct them to the exit.

2-13C Emergency Stop without Electrical Power

The **Red EMERGENCY STOP BUTTON** on the side of the Command Consol must be **depressed IMMEDIATELY**; this will disable the Electric Motors and set the manual brakes. Level the unit on both the pitch and roll axis manually as described in section 2-13D. Using the manual BRAKE RELEASE on the back of the lift motor, **slowly turn CW** to lower the unit all the way. Open the canopy and release the restraint harness and assist patrons from the cockpit.

2-13D Emergency Leveling and Lowering

To level the machine in the pitch axis pull on the PITCH BREAK RELEASE (Fig. 1) and level the machine manually. There is a level mounted on the **Roll Motor (Fig. 2)** to aid in getting the ride into the home position. A Second person should be used when performing this procedure.

Fig. 1

Fig. 2

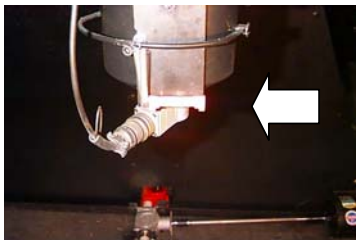

To level the machine in the roll axis move the manual BREAK RELEASE LEVER (Fig. 3) towards the Tail Boom Cover. There is another level mounted on the back of the seat frame (Fig. 4) to help find home level in the Roll axis.

Fig. 3

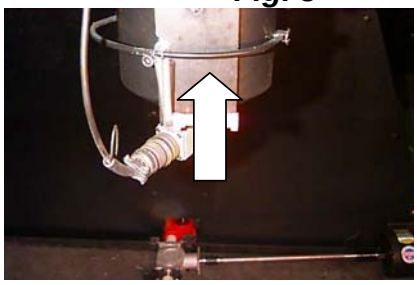

Fig. 4

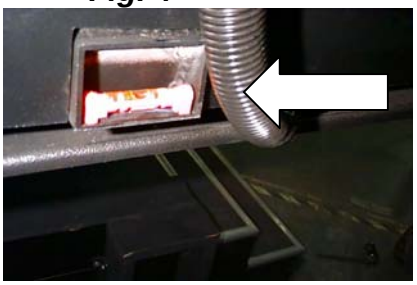

Fig. 5

Once the machine is in the HOME position (level on both pitch and roll axis) it can be lowered. Using the manual **BREAK RELEASE KNOB** on the back of the Lift Motor (Fig. 5), **Slowly turn the knob clockwise** until the platform lowers all the way. Adjust lowering speed by the amount you turn the knob. Releasing of the knob will stop the lowering.

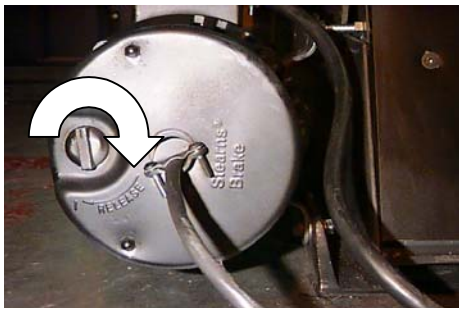

CAUTION: WHEN LOWERING UNIT MANUALLY, ALLOW UNIT TO LOWER IN 6 INCH INCRIMENTS AND FINALLY COME TO A SLOW, SMOOTH STOP.

2-14 Power Interruptions and Restart Procedures

Should the power be interrupted, the following procedures should be followed.

2-14A Facility Emergency Lighting

Facility emergency lighting must be configured to allow attendants and patrons enough lighting to safely exit the ride and area.

2-14B Restart Procedures

Even if the power comes back on, lower the platform to its full down position, using the **manual lowering procedure para. 2-13D**. If the power is normal, you can follow the **normal Start-up procedures para 2-2**.

2-15 Ride and Facility Evacuation Procedure

Terminate the ride from the computer. Quietly and calmly, have the queue line begin exiting the facility. Lower the unit(s) open and unbuckle all patrons and assist with the evacuation of the facility. Follow the

system shut down procedure if time permits press the **"E-Stop"** this removes power to the electric motors. **NOTE: It is most important that the power to the motors be disabled.**

2-16 Ride Termination Conditions

1. Any abnormal vibration or abrupt motion changes that would not be considered part of the normal operation.
2. Any undue movement of either the fiberglass, covering panels, A-frames or any hinges or fabricated metal that would indicate fatigue, fracture or loose bolts.
3. Any type of electrical problem that would effect continuation of the game and could include electrical problems within the building that could inadvertently affect the operation of the simulator.
4. Any computer malfunction that would include system lock-up, program termination or any other condition that would affect game play.
5. Any condition with the movement that is abnormal (i.e. the TV set showing a roll where the simulator remains stationary).
6. Any loose objects that roll around inside the cockpit as these items would damage the patron as well as the components inside the cockpit.
7. Any signs that the concrete anchors may be loose by allowing the unit to walk or move.
8. Any signs of smoke or sparks which would indicate the potential for fire.
9. Any condition where the passenger was tampering with the system such as pounding on the fiberglass or undue pressure on the cockpit.

2-17 Operational Restrictions

There are certain conditions that the machines should not be operated under. These conditions are described below.

2-17A Intoxication

If a patron is under the influence of any drugs or alcohol they should not be allowed to utilize the equipment.

2-17B Heart Conditions

Any heart or other similar condition would preclude a passenger from riding the simulator.

2-17C Pregnancy

It is not recommended that women who are pregnant ride the simulator.

2-17D Weight and Height Restrictions

The patrons must be at least 42" (1.1 m) tall to ride with an adult or 48" to ride alone.
Total weight of patrons not to exceed 500 lb.

2-17E Electrical Storms

It is up to the discretion of the owner operator to operate during an electrical storm. However, it is NOT recommended to rely on the internal facility safe guards to protect the equipment. When in doubt, shut down the system to ensure safety of not only the passengers but also the safety of the system.

2-18 Daily Inspection Checklist Description

The Daily Checklist is to be completed by the first shift attendant operating the FS2000 as well as the second shift attendant (if applicable) at the beginning of his/her shift. These sheets must be filled out on a daily basis. DO NOT check off the items in the checklist unless you have performed the required

inspection. This maintenance is required to maintain optimum performance of the FS2000. The master copy of this checklist can be found at the end of the *Operator's Manual.*

CHAPTER 3 – SUGGESTED POSTINGS and Manufacturer's Specifications

3-1 Manufacturer's Specifications

Reference Standard:

ASTM-F24 Standards on Amusement Rides and Devices

1. F583 Maintenance Procedures for Amusement Rides and Devices
2. F893 Inspection of Amusement Rides and Devices
3. F1159 Design and Manufacture of Amusement Rides and devices

MaxFlight, Corp., at the time of the initial design and prototype manufacture, determines by calculations and testing the appropriateness of the functional design criteria. The visual esthetics of the ride are also evaluated and together with the functional design criteria make up the manufacturer's design specifications. These design specifications are adhered to on all subsequently produced rides of the same style. Occasionally, through field experience, it becomes necessary to specify a modification to the original design specifications. Actual modification to meet the change in design specifications can only be performed by qualified personnel, following the directives of a MaxFlight, Corp. Service Bulletin, Service Kit, or a MaxFlight, Corp. representative, where applicable.

Any modification performed on a MaxFlight, Corp. product outside the recommended directives established by MaxFlight, Corp. as referenced above, constitutes an unauthorized modification. MaxFlight, Corp. specifically disclaims any liability for loss associated with any unauthorized alteration and/or modification to any of its products. MaxFlight,Corp. will not issue letters for the operation of rides which do not meet the manufacturing specifications; this includes cases where the non-conforming modifications of an aesthetic nature only.

It is the responsibility of the individual inspector to thoroughly inspect the ride as deemed necessary, based on his knowledge and field experience to determine that the ride meets the manufacturers and/or is safe for operation. To locate current service bulletins and ride manuals, go to www.maxflight.com web site.

3-2 Suggested Postings

This chapter also contains notices that we suggest be placed near the unit to promote the safety of patrons as well as operators and to ensure proper operation of the ride.

EMERGENCY PROCEDURE
POSTINGS

Emergency Stop Procedure

The **Red Emergency Stop Button**, located on the side of the command consol, **MUST be depressed IMMEDIATELY**. This will deactivate the Electric Motors. The unit will need to be leveled manually on both the Pitch and Roll axes. Located on the back of the Lift Motor is the manual brake release knob. **SLOWLY** turn the knob clockwise until the unit lowers from the elevated position. Adjust the lowering speed by the amount you turn the knob. After the ride has lowered, open the canopy, raise the harness restraints and aide the patrons in exiting if necessary.

Ride and Facility Evacuation Procedure

Terminate Game Play from the host PC. Quietly and calmly, have the Queue line begin exiting the facility. Lower the unit, open the canopy, raise the harness(s) and unbuckle the patron(s), then assist with the evacuation of the facility.

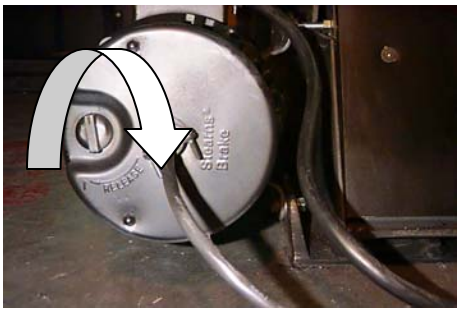

NEW EMERGENCY RAISE PROCEDURES

FOR

ELECTRIC MACHINES RUNNING "MITSUBISHI INVERTERS"

NOTE ! **Power must be available to the Inverters.**

This Emergency Procedure to be used anytime if/when the Motion Platform lowers in a abnormal way, ie: Contacts the stands, floor or is stuck half way between all the way UP or DWN.

1. Anytime an abnormal action occurs on the motion platform the operator **MUST** immediately depress the **E-Stop** on the side of the command console.
2. Verify that the E-Stop is depressed.
3. On the **Lower Right** corner of the **Task Bar** right click with the mouse on the icon that contains a checkmark in a green circle. This opens a Properties window.
4. Click on **Emergency Raise**, another control window will open up showing a STOP and RAISE icon.
5. Pull out the E-Stop on side of command console. Verify immediately that there is no motion on the platform. If there is push E-Stop back in immediately and then back out, this will reset the brakes on all drive motors.
6. Click on **RAISE** icon, the unit platform will rise approximately ½ to ¾ of an inch at a time. It will do so until it contacts the upper limit sensors and stop.
7. When motion platform is all the way UP, **DEPRESS E-STOP**.
8. Manually level the platform in Pitch and Roll.
9. Lower the platform using the manual lowering procedure, by turning the brake lever on rear of lift motor clockwise slowly until the platform lowers.
10. Lower all the way. When down on the stands open the cockpit and help patrons out.
11. Call Maintenance for repair and/or unit testing to certify that this unit is safe to operate.

PATRON NOTICE

Maximum Passengers Per Ride: 2

Maximum Combined Weight: 500 lbs. / 226.8 kg

Minimum Height Per Passenger
To ride alone: 48 in. / 1.22 m
Minimum Height to Ride with
A responsible Adult: 42 in. / 1.1m

This ride is **NOT RECOMMENDED** for persons who:

- Are under the influence of alcohol or any type of drugs.
- Are pregnant.
- Suffer from Motion Sickness or Claustrophobia.
- Anyone having Heart Conditions, Back or Neck Ailments or any Serious Disabilities.
- Epileptic patrons; due to the special strobe and lighting effects that are known to trigger seizures

All loose articles such as pens, loose change, etc. that may come off during flight should be removed.

- Patrons have a responsibility to exercise good judgement and act in a responsible manner while riding the VR2002.

- Patrons have a responsibility to become familiar with and obey all oral and written warnings and instructions prior to and during their use of the VR2002 simulator.

The MaxFlight VR2002 is intended for the enjoyment of patrons and the above information is for your safety and well being.

MaxFlight Corporation

1 Executive Dr., Toms River, NJ 08755-4947
Phone: (732) 281-2007 Fax: (732) 281-2009

Electric FS2000 Daily Inspection Checklist

Date of Inspection:_____ AM Inspected By:_____

PM Inspected By:_____

*** These sheets must be filled out completely and kept in your records.**

AM Check	PM Check	
_____	_____	Inspect projector for proper operation and cleanliness
_____	_____	Make sure that the ductwork is secure and functioning properly
_____	_____	Check to see canopy sensor works properly
_____	_____	Make sure the sound system and speakers are secure and operational
_____	_____	Make sure the cockpit **Occupant Panic Switch** is functioning properly
_____	_____	Inspect and verify correct operation of shoulder restraint system.
_____	_____	Inspect seat belts for proper operation and condition
_____	_____	Make sure gas spring safety clips are secured properly
_____	_____	Make sure the screen assembly and padding are secure and in good condition
_____	_____	Make sure canopy alignment pins are tight
_____	_____	Inspect the Cockpit latch for proper operation and condition
_____	_____	Check stairway for any movement
_____	_____	Ensure the **Emergency Stop Button** (Power Box) is functioning properly
_____	_____	Verify tail boom stand is in its correct position. Check condition.
_____	_____	Make sure the concealment panel on the tail cover is secure (If installed)
_____	_____	Ensure that the molding on the cockpit and tail boom cover is intact and secure
_____	_____	Make sure tail cover bolts are snug
_____	_____	Inspect all fiberglass for any visible damage
_____	_____	Make sure all pine tree fasteners are in place and panels are secure
_____	_____	Check for general ride cleanliness
_____	_____	Inspect any entrances, exits, stairways, ramps, fencing, guarding and barricades
_____	_____	Inspect the flange welds of the Right/Left Pitch Shafts and Counterweight shaft at the center weldment to ensure that there are no cracks, also inspect the safety wire and bolts for security
_____	_____	Ensure the Manual Leveling and Lowering Brake release Levers are functioning Properly

NOTE: When inspection is completed, run one full ride cycle to ensure all system components function properly

APPENDIX A – SITE CONFIGURATION REQUIREMENTS

To determine the site configuration, there are several factors that need careful attention.

1 - Available Floor Space

Each unit has a footprint of 12’ 8” (3.9 m) wide by 17’ 3”’ (5.26 m) deep, including the loading platform. Depending on the site topography, the actual configuration will vary.

2 - Ceiling Clearances

The ceiling height requirement is 12’ 10” (3.9 m) with a pathway of approximately 4’ (1.2 m) wide at the top, 2’ (0.61m) either side of center.

3 - Floor Loading Capabilities

Floors must be able to support the weight of the units. To obtain this information, consult an engineer or an architect.

Approximate Unit Weight – 4200 lbs (1909 kg)
Load Distribution per Square Foot – 25.26 lbs (11.4 kg)

4 - Aisle Clearance

Consult local building codes. A minimum of 6’ (1.83 m) is recommended, but should not supersede the local building codes.

5 - Entrances & Exits

Egress routs must be clear and unobstructed. Local building codes will dictate.

6 - Environment

Keep facility operating temperature reasonably stable. Temperatures less than 80 degrees Fahrenheit with humidity levels less than 60% would keep patrons comfortable and keep equipment functioning well. Also, for the best visual effect, facility lighting should be kept low.

Caution – If the operational environment, temperature and humidity, is not stable it will cause damage to the electronic equipment.

7 - Floor Finishes

A carpeted floor is the preferred floor finish. Tiled floors and bare concrete floors are okay but may require placing the machine on an anti-slip pad.

8 - Truck Routes

Depending on the size of the purchase, there could be a need to have access to the facility capable of accommodating large freight trucks, which require maneuvering room.

9 - Docking

Obtain and forward dock heights before shipping arrangements are made so that accommodations can be made for the ease of unloading.

10 - Freight Elevators

When installing units that are above the ground or dock level of your facility, examination of freight elevators for capacities, size and operability is necessary. Schedule time and operators for the day of delivery where applicable.

11 - Electrical Configurations

U.S. CONFIGURATION

Facilities with available three-phase service need:

A. 1 circuit single-phase, 115 volts, 20 amp, 60 Hz
B. 1 circuit three-phase, 208 volts, 30 amp, 60 Hz

EUROPEAN CONFIGURATION

Facility requirements are:

A. 1 circuit single-phase, 220 volts, 10 amp, 50 Hz
B. 1 circuit three-phase, 230/380/440/480 volts, 20 amp, 50 Hz

HONG KONG CONFIGURATION

Facility requirements are:

A. 1 circuit single-phase, 115 volts, 20 amp, 50 Hz
B. 1 circuit three-phase, 230 volts, 20 amp, 50 Hz

12 - Public Barrier System

Barriers/fencing may need to be set up to restrict patrons from coming within reach of the machine while in operation. Local laws and ordinances must therefore be complied with by the owner/operator. It is not MaxFlight's responsibility to provide or install the public barrier system.

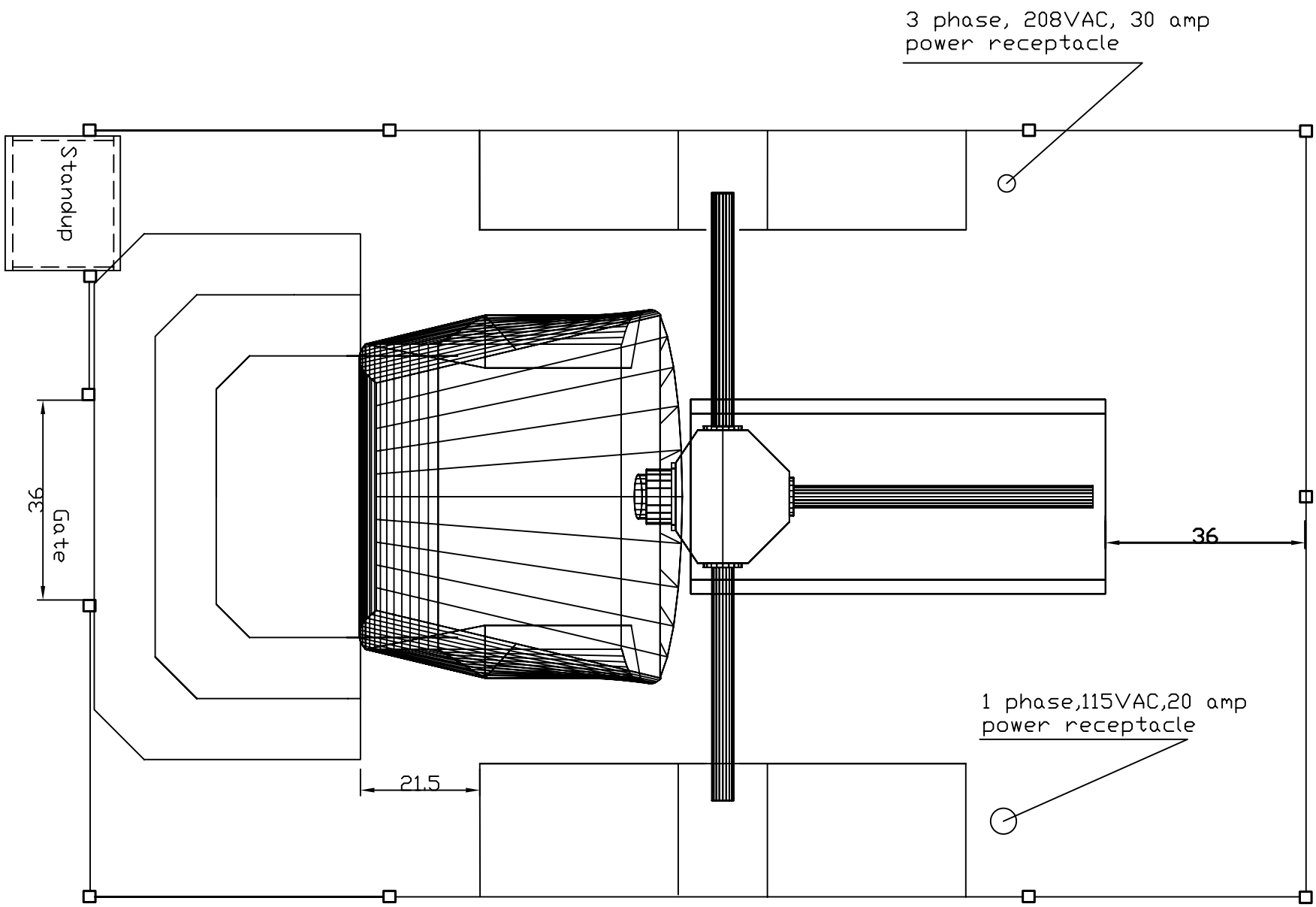

Footprint of MaxFlight Machine with new fence

MaxFlight
FS2000(B)
"ELECTRIC"

Technical Manual

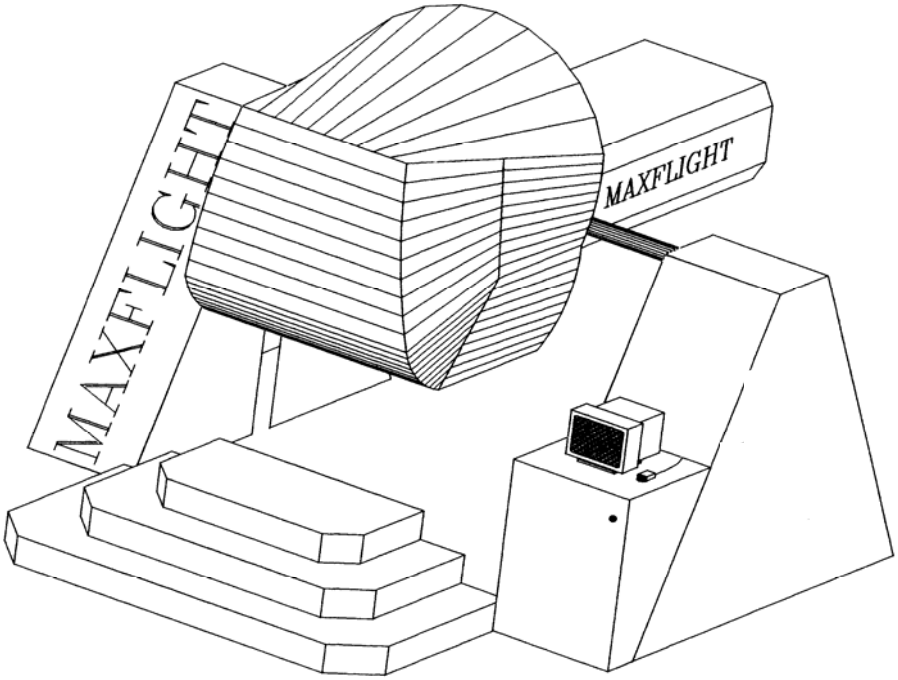

CHAPTER 1 – THEORY OF OPERATION

1-1 Introduction

To understand why certain steps have to be performed while running this motion simulator you should know how the unit does what it does. You also need to know how each part plays its part so when something should go wrong, it can be corrected with minimum down time.

NOTE: The Inverters must be matched at the factory to the power available in the field installation. The motors can be rewired for various inputs but the inverters cannot.

1-2 ELECTRICAL

1-2A Input Power: 115/220 VAC one phase 60hz for computer, blowers, projector, audio amplifiers.
208/380/440/480 VAC three phase, for drive motors.

.

1-2B Power Box: Contains the following;

1. Three frequency drive invertors that are the same
    a. Pitch
    b. Roll
    c. Lift
2. Frequency drive for the counterweight motor
3. Three brake control relays
4. CPU interface distribution box, serial control bus
5. Main power relay contactor and thermal overload protect
6. Receptacles for all connections
7. Cooling fan
8. Transformers: When wired for foreign or high power over 208VAC.
    a. One for power contactor, fan control , 380/440/480 to 115 VAC.
    b. One transformer that will convert 380/440/480 to 230 VAC two phases for C/W inverter and brake solenoids.
    c. One for local single phase power to 115 VAC power that all equipment is set for on the machine. Example if single phase is 220 VAC then a x-former will convert 220 to 115 VAC.

1-2B(1) Power box using "Lenze" type inverters.

1. Three frequency drive invertors that are the same
    a. Pitch
    b. Roll
    c. Lift
2. Frequency drive for the counterweight motor
3. Cooling Fan
4. Main power contactor
5. Receptacles for all connections
6. Serial communication panel on each inverter and control cable.
7. Analog control panel for the large inverters only plus cable.
8. Circuit breakers for brake and counterweight inverter circuit.
9. Fuses, for main power E-Stop circuit and inverter brake relay circuits.

1-2C Electro Magnetic Interference (EMI)

EMI is a problem when you have high current wires laying parallel with low current/voltage wires. When the magnetic field about a wire changes, that change induces voltage spikes or signal interference into associated wires. If this becomes a problem there are ways to correct this. One, is limiting induction on other wires by using shielded cables and connections. The other method is to space wires apart or run them ninety degrees to each other. In this system we use both methods to limit power interference into video, audio and control signal cabling.

1-2D Roll Axis

Roll Motor: Three phase AC motor. Mounted in the center weldment with one bolt and torque arms with bushings. Roll shaft and hub assembly gets mounted through the center of the gearbox. Gearbox pre-filled at factory. A key transmits torque to roll shaft.

Roll Brake: Mounted on the end of drive motor. Stops motor rotation and holds the axis where last left. It receives 220 VAC to the rectifier inside the enclosure. The coil is a 220 VDC unit. It has a manual release lever.

Roll Encoder: Mounted on the end of the roll motor shaft. Sends roll position of the platform back to the computer via the interface board and motion control board.

1-2E Pitch Axis

Pitch Motor: A motor gearbox combination mounted to the left pitch shaft. Physically moves unit in pitch axis. Filled with gear lube at the buildup of the unit.

Pitch Brake: Mounted on the end of pitch drive motor integral to the unit. . It receives 220 VAC to the rectifier inside the enclosure. The coil is a 220 VDC unit. It has a manual release lever.

Pitch Encoder: Is a 480 or 100 line encoder mounted to the motor shaft. Sends pitch position to the computer via the interface board and motion control board.

1-2F Lift Axis

Lift Motor: Motor brake combination. Mounted at the right rear inner side of the A frame. Connected to a 90-degree gearbox via couplings and drive shaft. Drives, through couplings, the lift jack gearboxes at each side of the base.

Lift Brake: Mounted at end of the motor. Controlled by a 220 VAC coil.

Lift Encoder: Mounted to the drive axle from motor to the ninety degree gear box. A 120 or 100 line unit that gives height feedback to the computer via the interface and motion control boards.

1-2G Counterweight Drive System

Drive Motor/Brake/Gear box mounted on top of center weldment, attached to a horizontal drive screw and clutch that moves the counterweight in either direction as commanded by the CPU.

Brake attached to end of motor, this is a 115 VAC controlled coil.

1-2H Pitch Slip Rings

These units are sealed no maintenance required or allowed.

1. **Power Side:** Located above the power cabinet right side on the end of the pitch shaft. Feeds wires to the center weldment to the roll motor/brake and counterweight motor/brake.

2. **Signal Side:** Located at the end of the pitch shaft left side right before the pitch motor. Transfers 115/220 VAC to the cockpit power strips. Feeds the composite

video from on-board through the Avery key ,TV Elite and new dual video card to the external TV.

3. **Mini Signal Ring**, when utilized is located within the center of the larger pitch signal ring, transfers the roll encoder power and signal, canopy sensor and occupant E-Stop signals. (Retro when signal ring requires repair).

4. **New H24+4 Signal Rings:** Located in center of pitch shaft and roll shaft. Transfers signals, to and from computer, TV, and sensors.

1-2I Blowers

1. 4.5" blower mounted on pitch motor.
2. 3.5" blower for the projector.
3. 2- 4.5" blowers mounted at rear of cockpit for ventilation.

1-2J Power Strips

One left inner rear side of A-frame and two located under seats of the cockpit and one in base of command console.

Note! On newer units, the power strip is located in front left side base, next to the motion computer.

1-2K Sensors/switches

One left upper limit sensor, one right upper limit sensor, one lower or down sensor, and one demo switch sensor. Inside the cockpit you have, one canopy sensor, patron e-stop switch, and shoulder restraint safety sensors.

NOTE! EM-99 and up, new tilt sensors have been installed on the outriggers of the A frames.

1-2L Switches

E-Stop power switch on the side of the command console (older units) and front of operator station cabinetry (newer units).

1-2M Encoders

All encoders (three) are the same. A 120 or 100 line, metal disc type. Power to them is from the computer, a + 5 VDC signal powers the light diode that shines through the disc to a receiver diode.

1-2N Interface

Interface Control Boards are by Omnitech (older units) and Oregon Micro System (newer units) located behind left front cabinetry. Their function is identical.

1-2O Roll Slip Rings

Located between the weldment and the cockpit. Mounted over the roll shaft it passes the signal to the cockpit. These units are sealed and no maintenance allowed.

1. New **H18+4 and H24+4,** mini slip rings are mounted on the inside of the roll drive shaft on the aft end inside center weldment. These are gold contacts and rings. No maintenance required.

1-2P Joysticks/Throttle and UGC/USB HAAP Box Interface

There are two flight joysticks and two throttle's installed within the cockpit area. These units interface to the HAAP controller's (two) installed between the seats inside center console. The signals are transferred to the on-board CPU via a USB cable connector by way of dual USB controller PCI board or standard USB connections, mounted to the mother board. Certain older HAPP controllers are connected to the computer via DB-9 connector on COM#1 connection. Power is supplied from the CPU via USB cables

or separate transformer. The controllers are calibrated within the flight program configuration windows, for Mondo Bizzaro program or, directly via device access through system devices.

1-3 Mechanical

1. A-frame - two each, right and left.
2. Center weldment.
3. Pitch arms two
4. Tail shaft
5. H frame assembly, attached to the tail shaft
6. Counterweight gear and gear box
7. Counterweight @300 pounds
8. Chair assembly
9. Seat back assembly
10. Lift drive network
11. Roll motor mounting
12. Pitch motor mounting
13. Roll hub assembly
14. Fiberglass cockpit shells
15. Front stand
16. Rear stand
17. Entry stair assembly
18. Cabinetry

1-4 COMPUTER SYSTEMS

1-4A Command Console

1. CPU- LAN, audio and video located on mother board, motion control board, network card, modem board, power supply, hard disk drives, CD drive, and software to control it all.
2. Monitor
3. UPS (Uninterrupted Power Supply) when installed.
4. Cabling

1-4B On-Board Computer

1. P-4 processor, 1.7 GHz/ 256 MB ram or higher.
2. Mother board, holds audio, com#1, network plug, two or more USB ports or USB PCI card and LAN connector.
3. INVIDIA GE-force III/AGP video card. (Or other high end video card).
4. PCI mounted COM#2 card (if used)
5. Wireless network adapter plugged into mother board USB port or hard wired LAN connector to network port.
6. PCI mounted dual USB port adapter for UGC/HAAP board controllers.

1-4C On-Board Audio/Video System

1. Computer based pre-amp to main amp audio feed
2. Main power amp mounted right lower ABS side of cockpit feeds, two seat and two front main speakers (older units)
3. Newer units will utilize a base boost amplifier assembly. Located lower right under the seat. This powers two internal speakers mounted above the patrons head each side of upper canopy.
4. Center mounted Avery key/TV Elite or new style dual video cards;
    a. Sends RGB signal to on-board projector
    b. Sends composite signal through rings to external projector or TV

1-5 What Causes the Unit to:

1-5A Raise

NOTE: In the following brake "OFF means brake solenoid is powered, allowing motor rotation. Motor brake "ON" is brake solenoid de-energized and brake is applied preventing rotation.

When you click on the **"RAISE"** icon on the program window, this signals the CPU that you want to start the raise sequence.

1. LIFT BRAKE "ON" CPU signals the motor drive invertors of pitch/roll to set the brakes to "OFF"
2. Pitch, roll and lift encoders are set to zero and monitored for count by CPU
3. Lift brake "OFF", platform raises @1.5-3.0" and stops the raise command to allow platform to level, Lift brake back "ON".
4. Monitoring the pitch encoder, the counterweight moves opposite the heavy end, stops, reverses direction, stops. The CPU counts the encoder value takes the average and takes ½ the signal to drive the counterweight to null or balanced position. Also as the cockpit pivots forward, resting momentarily on the support stand, at that instance the CPU reads the roll encoder and uses that signal as the roll level indication. Roll and pitch motor brakes are turned "ON" thereby locking the axes to zero before the remainder of lift occurs.
5. Lift brake to "OFF" , CPU monitors lift encoder for the rest of the raise command. Platform raises a max. of 29.68", calculated by counting lines per revolution per inch of raise.
6. Platform reaches the top, slows down, lift brake turned "ON". Upper limit switches do not stop raise power of lift motor. They are only a signal to the CPU that the platform has reached the upper limit and it is safe to allow full motion.

1-5B Lowering

At the completion of a programmed ride or anytime normal lowering is desired the following occurs:

1. CPU commands pitch/roll brake "ON".
2. CPU while monitoring the lift encoder during decent, counts the lines per inch. Lift brake "OFF" lowering initiated. Computer encoder count set to 0.00"
3. CPU measures @2" of decent and slows the lowering speed.
4. CPU measures @1.5" of decent and slows motor again.
5. At @.5" the CPU commands pitch/roll brakes "OFF", these stay off for remainder of action.
6. Platform comes to rest at @0.00", hits lower stop bar, CPU stops lift motor drive and turns lift brake to "ON" for .5 sec. Then "OFF". This ensures hat the platform is all the way down.
7. Lowered sensor is enabled, this signals the CPU to zero all the encoders (3), resets all programs to default start and readies for the next cycle.

1-5C Stop

STOP is a command given by:

1. **Computer** during a normal cycle of operation that is semi-automatic in nature.
2. **Manual** directed via the CPU by the operator. Stops all motion if in a running program. Stops motion when testing an axis in manual test.
3. **E-Stop** manually removes all power to the motor drives and applies all the brakes on all the motors instantly. This halts all motion instantly.

1-5D Pitch and Roll

<u>Roll/Pitch</u>

CPU program commands digital motion via motherboard (COM 1), cabled to the power box, to the respective frequency drive unit (Mitsubishi inverters) using a 432 to 485 optical isolated converter, inside

the connector. This sends digital communications to all communication modules located at top of each inverter in the power box. Inverter Test Client Program.

Mitsubishi Client program, this program commands the direction and rate of movement using an analog signal 0+-10VDC. The respective encoder sends a counter signal back to the CPU via the Interface card, cable to the Motion Control card to the program. When the encoder signal cancels out the control signal all motion stops.

1-5E Balance

See paragraph 1-5A, it includes complete detail.

1-5F Interface with Relays and Contactors

1. Brake relays in the power box are activated by the CPU sending a signal to the serial interface box in power box , to the inverter and finally the OPTO 22 relay. This relay allows the second leg of the 220 VAC power to get to the brake solenoid on the motors.
2. The Power Contactor relay is activated by pulling out the red E-Stop button. The same button turns all power off to the power box by removing control from the contactor.
3. Some earlier power boxes, utilizing "Lenze" inverters, the brake relays are integral to the inverters. Top right front of the inverter is a quick disconnect plug. On pitch and roll, the brake wires are wired to the N/C contacts of the relays. Lift brake, is wired to the N/O contacts of the brake relay. These relays are controlled by parameters of the inverter. When motion is demanded the relays are activated, allowing motors to drive and brake solenoids activated.
4. Later "Lenze" powered units utilize OPTO relays just like step #1.

1-5G Interface with Motion Control Board

1. CPU provides +5 to the interface board from the computer power supply through motion control card and ribbon cable to the interface board. This power (+5VDC) is used by the encoders and all sensors. Using dead end resistor network the +5VDC is used by the sensors powered from this panel.
2. All encoder return signals pass through the interface board to the CPU motion control card and on to the program running.
3. All sensor switch indications run through the interface board. The signal that the CPU reads is either a +5VDC signal or a high switch open or 0 VDC switch closed.

1-5H Interface with Unit Sensors

There are seven sensors that are monitored by the CPU (older units) and nine sensors (newer units EM-99 and up). Signals flow from the sensors to the interface board on to the motion control board in the CPU. These are:

1. LH upper limit
2. RH upper limit
3. Down sensor
4. Patron E-stop sensor
5. Canopy sensor
6. Right shoulder restraint safety sensor
7. Left shoulder restraint safety sensor
8. Left tilt sensor (EM-99 and up)
9. Right tilt sensor (EM-99 and up)

1-5I Interface with Projector/TV and Monitor

CPU mother board processes the signal and passes it on to:

1. Monitor, connected to video output in rear of CPU, allows the operator to see control windows etc.
2. On-board CPU, INVIDIA GE force cards are used o the FS2000 units, these signals are processed and passed on through TV Avery Key, one consolidated signal goes to the TV or external projector the other VGA signal goes to the on-board projector.

1-5J Interface with Inverters and the power box

Command Console CPU, controls programs that send signals through the motion interface software and then to the Omnitech or Oregon Micro Systems Motion Control board. The motion control board conditions the signal, +or- 10VDC, that in turn activates the inverters movement. This voltage gives direction and rate to the respective axis. The software monitoring signals are transmitted through the serial interface cable to/from each inverter. This signal controls when to apply or release the motor brakes and monitors internal parameter functions of each inverter.

1-6 – OPERATING LIMITATIONS

1-6A Computer

When starting up the computer system, the operator should observe any error indications or signs that the computer is not functioning correctly. Provided there are no error messages and the game can be initialized, the system should be cycled at least once to ensure that the computer is functioning properly.

1-6B Restraint System

By raising and lowering the restraint harness you will be able to establish that they are operating properly. If any part should fail, the unit should be shut down until the repair is made. Test the operation of the safety sensors daily.

1-6C Electrical Control Box and Mitsubishi/ Lenze Inverters

The Electrical Control Box should allow adequate amount of airflow so the inside so inverters can stay cool during operation. Avoid locations where the control box is subjected to direct sunlight, high temperature and high humidity. The emergency stop button **must** be used to remove power supplied to the motion system before servicing the control box.

Warning! Failure to allow the capacitors within the inverters to discharge can result in serious personal injury by electrocution and possible death.

NOTE: Verify that the main power is disconnected at the wall outlet or circuit breaker panel or power cord unplugged at the power box, and wait at least ten (10) minutes before entering the Electrical Control Box. This is to ensure that the power capacitors are fully discharged.

1-6D Frame and Structure

A daily inspection of bolts and welds should be accomplished to ensure that there is no metal fatigue or loose bolts. Loose bolts should be tightened in accordance with MaxFlight specifications, however, if there is any question as to why there are loose bolts, the unit should be shut down and examined to determine any causes that are not obvious. It is up to the operator to report these conditions to qualified, on-sight technical personnel only. If there are any stress cracks or cracks in a solid member, the system should be shut down and examined immediately.

1-6E Motion Platform

If at any time there is a question with the stability of the motion platform, passengers should not be allowed to enter the ride until an adequate means of entry or exit is available.

CHAPTER 2 – ELECTRICAL SYSTEM

2-1 Electrical System

The electrical system provides the force for the motion of the unit during operation. The motion base is a two-axis system with a lifting system for raising the unit to the operation position, and a counterweight system for balancing the cockpit. Each of the axes has an electric motor that drives in two directions. Three phase power is sent to the input of the variable frequency inverters. These in turn control the rotation of each motor. Sending a DC analog signal from a remote computer to the inverters can set the direction, position and speed of the motors precisely. The RS-485 connection is a serial communication path between the inverters and the computer, which allows the computer to monitor and send commands to the inverters.

Located inside the right A-Frame, the electrical panel incorporates all the electronics mentioned above. The panel contains fourteen (14) connectors, namely the main power, pitch motor power, pitch motor brake power, lift motor power, lift motor brake power, fan power, roll motor power, roll motor brake power, counterweight motor power, counterweight motor brake power, two RS-485 communication ports (one spare), inverter speed analog signal, and emergency stop button connector. Four Mitsubishi/Lenze inverters are mounted inside the panel. Pitch, roll, and lift run on bigger units; the counterweight runs on a smaller unit. See panel drawings at the end of this manual for more information about where they are mounted in the Electrical Control Box.

10Base-T networking receptacles are used for the RS-485 communication ports for Mitsubishi style inverter boxes. RS-485 communication on Lenze inverter boxes is done through DB-9 cable system. Hubbell twist lock connectors are used for the main, pitch motor, roll motor, and lift motor power. All other connectors are military style connectors (older units) and molex connectors newer units.

Motor power connections provide 208 to 480-volt 3-phase power to the Pitch, Roll and Lift motors, and brake power connections provide power to the motor brakes. The counter-weight motor brake is powered by 110-volt single-phase system the rest are 230. The frequency inverters ensure that the brakes are not applied during motion.

The computer program knows the position of the unit by reading the encoders on the pitch, roll, and lift axis. The encoders are electrical devices powered by a 5-volt supply on the motion control interface card, movement can be measured by sending a light beam through a metal disc that has either 400 or 480 holes/slits on it. Each light or dark sends a pulse to the Computer Motion Control Board, which “reads” the pulses and determines where in the pitch, roll and lift axis the motion platform is at any given time. The encoders know the position of each axis to within .006”. There is a safety backup to the encoders and that is software driven. It monitors the Roll and Pitch platform position. If the computer requests movement and does not get an encoder return signal it will default and shut down motion to the platform. Also should there be a motion on the platform greater than 15 degrees, that was not requested by the computer the computer will stop motion of the platform.

The counterweight is used to balance the cockpit and tail section at their vortex, referred to as the center weldment. The balance is obtained by powering a drive motor, located on top of the weldment, which moves the counterweight back and forth on a shaft as required to balance the machine. When the cockpit is balanced, the unit will rise to its maximum up position.

The emergency stop switch, located in the center of the cockpit, activates the emergency stop condition, returning the machine to its original horizontal (Home) position. Activation or accidental release of the shoulder restraint device will also activate the e-stop circuit, returning the platform to the home level position. The motion platform can then be lowered to the stairway by using the programs raise, stop and lower icons open at the time.

The upper and lower sensor switches, which are mounted on the center sections of the A-Frames directly in line with the bearing blocks, signal the computer when the machine is in the proper position to begin the game (raised) or load and unload passengers prior to or at the end of the game sequence (lowered).

The newly installed tilt sensors on each side of the machines outriggers, sense an out of balance raise situation, should one of the lift jacks fail to raise the machine normally on the faulty side. When the sensor activates, it will stop any/all motion to the platform.

The electrical swivels, slip rings, allow current and data signals to flow into the cockpit and associated devices via a series of rotating rings with brushes that make contact and allow pitch and roll motion through a range of 360 degrees in either direction.

The pitch input connections consist of cockpit power feed (120VAC), grounding wire, left/right phono jacks, counterweight motor feed, video feed, emergency stop and a data line to the roll encoder. These signals are then transferred to the center weldment where the power, phono, video and emergency stop and canopy sensor are transferred to the roll electrical swivel and on to the cockpit.

Thus, the unit can be described, from an electrical perspective, as being controlled from the computer and the electrical panel. RS-485 serial communication allows the Mitsubishi/Lenze inverters inside the panel to communicate with the computer, thus giving condition of the inverters, and an analog signal from the CPU, commanding what each inverter is to do. The encoders give feedback to the CPU, which is the heart of the system to null out motion and direction.

2-1A Counterweight System and MFMotion

The counterweight system relies upon the pitch encoder reading to determine the direction that the counterweight will move.

The unit (platform) must be level when resting on the base supports. The readings of the encoders are zeroed each time the unit is lowered onto the base. If there is any play in movement while resting on the base, this can interfere with the methods used to monitor balancing because, it will affect the initial readings taken that will determine how the counterweight is to be moved.

The front and back supports should be adjusted so to prevent any movement whatsoever when the unit is lowered and resting on them.

Care must be taken adjusting these supports to also ensure the unit is fully lowered and that the substantial weight of the cockpit is resting on the lift supports of the A-frame, not on the fiberglass cockpit or tail boom. With the platform properly installed, you must have no more than ¼" of space between each lower side of the cockpit and the top of the front support stand. This is assuming that the roll axis is also level for this measurement.

2-1B All system configured parameters referenced, are in the system registry under;

HKLM\SOFTWARE\MaxFlight\MFMotion\Parameters\Lift

The pitch axis inverter is disabled and the operation of the electric brake is adjusted so that the pitch brake is released, allowing free movement of the pitch axis.

The unit is raised a few inches **(Electric\Balance Position, in inches**)

and if it's out of balance, either the front or the back will remain resting or slowly return to resting on the base. The exact distance raised should be enough to allow pitch movement, allowing for any play between motor connection and the encoder, and small enough that the unit will still be resting on the base when it tips out of balance. This is usually 2 to 3 inches.

(Counterweight\Delay Before Adjustment, in seconds)

Is a value set that will configure and start the counterweight balancing. In electric machines, this value should always be zero (0); Any other setting will result in an unnecessary delay before balancing begins.

(Counterweight\Delay After Raising Stops, in seconds)

After the unit reaches the balancing position, the process delays a short time to permit the unit to settle if it was close to but not quite balanced already, otherwise momentum during raise may prevent pitch movement from correctly representing the balancing that's required.
This delay is also necessary because of latency in commanding the lift inverter to stop movement since the countdown begins immediately after movement is commanded to stop, even though the unit may not be stopped yet.
The current pitch reading is taken to determine the counterweight direction of movement. When the reading is <0, the counterweight is moved back (away from the cockpit); when the reading is >0 the counterweight is moved forwards (towards the cockpit).

The Pitch encoder is monitored for:
1.Being within specific threshold (+/-) of 0 degrees called

"Counterweight\Position Threshold

In encoder counts not, degrees indicating the unit balanced.

2.Crossing the "0" degree threshold indicating the unit balanced (ie; the unit began with positive pitch so once negative pitch is seen, the unit has balanced, or unit began with a negative pitch and now the pitch is positive.

3.Failing to do 1 or 2 within a configured timeout period

"Counterweight\Time Limit", in seconds, indicating a failure to balance.

4.On older units a limit switch was used. Newer platforms utilize a different linear movement mechanism (counterweight drive clutch release mechanism). This prevents the counterweight movement in excess of allowed range of travel. This prevents motor and drive damage or excessive movement also indicating a failure to balance.
The counterweight is commanded to move in the determined direction. This sequence (checking the position once before beginning movement at all) allows the counterweight not to be moved if the unit starts out properly balanced. The monitoring described above repeats until one of the four conditions is reached.

When the monitoring finds that the unit has balanced, the counterweight movement is reversed for a defined period of time

(Counterweight\Reversal Time, in seconds)

to account for the delay of the counterweight movement affecting the pitch reading; meaning that by the time the software detects the balancing is finished, the counterweight actually has continued moving a little further than desirable, so, the reversal is intended to move it back a little bit. If no movement of the counterweight was initially needed, indicating unit as balanced, no reversal is performed.
There is a certain latency in the communication with the inverter to control the counterweight; this delay also must account for that latency since command is issued and the countdown begins immediately, even though the inverter won't yet have reversed the counterweight movement.

Finally, the pitch axis inverter is re-enabled so that the motor will move the unit back to the original “0” degree pitch position that the unit started with and hold it there.
The unit will delay a configured period of time

(Counterweight\Delay After Completion, in seconds)

to permit any motor movement to complete and movement settle. This delay, again must account for the latency in controlling the inverter and allow enough time for the inverter to be enabled and for the motion control card feedback loop to control the pitch motor and keep pitch at “0” degrees.
After all this, the raising to the top continues.

2-2 Motion Platform Axis Movements

In order to insure that the three (3) axis motors (pitch, roll and lift) are moving in the proper direction, the following observations should be made. Clockwise and counter-clockwise observations are to be made from the position of the respective motor, facing the cockpit of the motion platform. For the **ROLL** axis, the observation point is from the center weldment facing forward. For the **PITCH** axis the observation point is from the pitch motor facing the motion platform. For the **LIFT** axis the observation point is from behind the motor facing towards the front of the motion platform.

2-2A Installing the MaxFlight Motion Com Objects (MF Motion)Package Version 1.2.5 or higher.

NOTE! The following procedure is followed for all Mitsubishi and Lenze equipped inverter power boxes utilizing the “Omnitech Motion and Interface cards.

Although, the following procedure is normally performed at the factory, there may come a time when the computer may have to be reloaded from the beginning due to a malfunction of the drives or other internal components.

1. Prior to installing the MF Motion package, your system must be updated with the latest version of Internet Explorer and the latest version of Microsoft Management Console 1.2.
2. If you are installing on a Windows NT 4.0 system, install Internet Explorer 5.01 and Microsoft Management Console 1.2. If these versions are already installed, you do not have to perform these steps. If Windows 2000 system is loaded, the above are loaded by default.
    a. Install Internet Explorer 5.01 or later.
    b. Reboot the computer when instructed.
    c. Install Microsoft Management Console 1.2 (run iMMC.exe from the MFMotion distribution CD).
    d. Reboot the computer.

3. Install the MFMotion package (run Setup.exe from the distribution CD). The default choices are appropriate for most systems. However, electric machines select **CUSTOM**, deselect Hydraulic system by “X” out drive type. Certain third party software packages are installed as part of this installation; if any ask for the computer to be rebooted, answer NO and allow the full MFMotion installation to complete.
4. Reboot the computer (this is generally advisable because the MFMotion installation also installs third-party packages that if updating your system may require a reboot).
5. The MFMotion installation installs default registry settings that are valid only for testing. They do not actively allow the motion platform to be driven. You must install the default registry settings for the particular type of motion platform and product you are installing this for.
6. To install the default registry settings:
    a. Open a Command Prompt window. (DOS window)
    b. Type “CD\Program Files\Common Files\MaxFlight “enter”
    c. Type “MFMotion<configuration><product>-RegUpdate”

"<configuration>" is one of the following

(1) -ME MC3628 / Electric
(2) -MH MC3628 / Hydraulic
(3) -GE Galil /Electric
(4) -TC Test Configuration

"<product >" is:

(1) -FS2000
(2) –FS2000
(3) –FS2000
(4) –CR2502
(5) –MT3000

and press Enter.

EXAMPLE; If you would type and enter "MFMOTION -ME -FS2000 -RegUpdate" this would be for an Electric FS2000 with an MC3628 adapter. (Flight Sim)

MFMotion –ME -FS2000 -RegUpdate "enter"

7. A message will appear on the screen confirming the registry update.
8. You can reload the default registry setting using this method any time. Do not load them while the Motion system software is running because they will be overwritten with the old values when the software ends.
9. The MaxFlight Motion COM objects are now installed and configured.

2-2B Installing the Motion Com programs with units equipped with Lenze inverters and the new "Oregon Micro Systems" motion and interface boards.

1. Load the latest motion com program 1.7.5 or higher.
2. Initialize the inverters using the setup procedures listed.
3. Update registry:
    a. Click start, r-click my computer, select explore
    b. Click on C:\
    c. To the right locate "motion_lenze_20050617.reg" file
    d. D-click on it to initiate registry update
    e. Window will state registry updated, click OK

2-2C Latest units are using a PCI communications card.

The latest computers utilize a PCI communications converter board. This board changes the RS-232, 432 to RS-485 format used in the digital communications with the lenze inverters. There are two com ports and usually only the top COM#3, connector is used. The board is made by Baltronics Inc. If the software must be installed for any reason, install the software and drivers before you install the board in the computer.

2-3 Initial Wiring Confidence Check

2-3A Input 3-phase Wiring

The wiring of the individual phases of input power to the controllers does not make any difference in the behavior of the drive motors. Guarantee that 208/380/480 three phase 60 Hz power is available.

2-3B Output 3-phase Wiring

The wiring of phases between the inverter controller and the motor affects the direction of motor movement
Reverse any two (2) phases of the controllers output to the motor, in order to reverse the motor direction.
Perform paragraph 2-4
To test and set correct drive rotation of all motors. Output power is digital DC to the drive motors.

2-4 MANUAL CONTROL OF INVERTER DRIVES

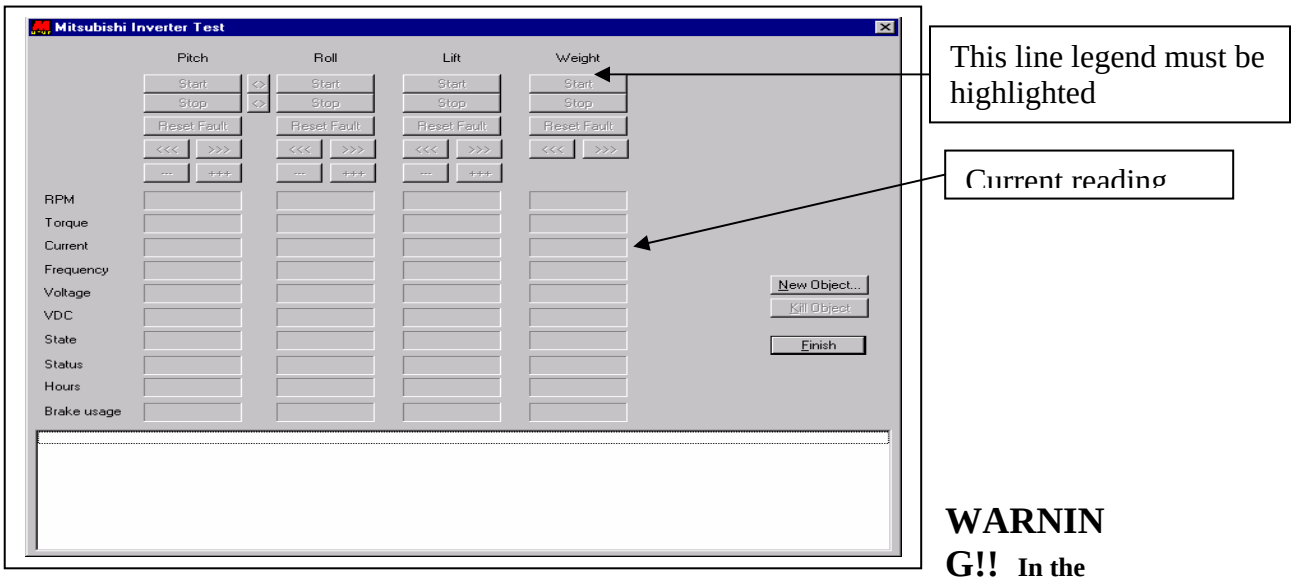

WARNING!! In the following steps all procedures must be followed exactly or grave bodily injury or equipment damage may occur. Make sure, "E-Stop" is pressed in, power off before proceeding. If the machine moves in the wrong direction, make corrections as in paragraph 2-3B above.

NOTE: Prior to performing this test, if the inverter/s are run for the first time you must open the inverter test program and ADD the inverter columns , also Paragraph 2-8 through 2-11 must be complied with or the respective inverter/s will not talk to the computer nor answer commands by the operator.

WARNING! This test procedure allows the maintenance person direct control of the inverter drive circuits. There are "**NO SAFEGUARDS"** available when these tests are performed. In other words if you accidentally activate pitch or roll while in the complete down position, you will drive the cockpit and/or platform into the ground or leveling stands. No one is allowed inside the rotation plane of the platform as long as this test window is active.

To perform manual inverter drive tests in the following axis these steps must be followed exactly:

1.) **Ensure that the "E-Stop" is pressed in, power off to inverters.**
2.) Double click on "Mitsubishi Inverter Test" icon on the desktop or go to program icon. This opens the test window for all the axes.

NOTE: When you apply power to the inverters by pulling out the "E-Stop" if there is any motion on the platform, immediately press "E-Stop" back in. Wait several seconds and try again if "OK" go to next step.

3.) Pull out "E-Stop" all the legends n the window should highlight and all axes must have the "START" icons highlighted. If not immediately press on the respective "STOP" icon to close that axes. Also ensure that the **OFF** brake icon is highlighted under each axes except counterweight.

NOTE: All axes movement of the motion platform is monitored by you sitting inside the machine/cockpit facing forwards.

2-4A Lift Axis

Before raising the platform you must manually balance the pitch axis by moving the counterweight till balance has been achieved. This can be verified by attempting to move the cockpit using two fingers. If up and down moves easy its close if not move weight until it is easy to move up and down.

1. To raise the platform, click on the left **RAISE** icon, the machine will slowly raise to the top.
2. Monitor the current value. As soon as it starts to rise sharply press "STOP" icon.
3. To lower the platform, click on right **LOWER** icon and the platform will slowly descend.
4. Monitor the current value. As soon as it starts to rise sharply, press "STOP" icon.

NOTE: The platform can be stopped at any point along the lift axis. However, you must not command any other axes motion unless the platform is all the way at the top or equipment damage or personal injury could result.

WARNING: THE PLATFORM MUST BE ALL THE WAY AT THE TOP BEFORE RUNNING EITHER ROLL OR PITCH MOTION.

2-4B Roll Axis

NOTE!!!! Motion as seen sitting in the machine facing forward.

1. Click on **RIGHT** icon, the machine will roll clockwise (+) direction, it will continue to roll until you command "STOP"
2. Hit "STOP" before commanding rotation in opposite direction
3. Click **LEFT** icon, the machine will roll counter-clockwise (-) until you hit stop.
4. Hit "STOP" before commanding rotation in opposite direction.

2-4C Pitch Axis

1. Click on left **DOWN** icon, the machine will PITCH DWN (-) direction, it will continue until you command "STOP"
2. Click on "STOP"
3. Click on right **UP** icon, the machine Pitch UP (+) direction.

Hit "STOP" before commanding rotation in opposite direction

2-4D Counterweight Motor

1. Click on **DECREASE** icon, weight will move towards the center. Hit "STOP" before going the other way.
2. Click on **INCREASE** icon, weight will move away from the center.

2-4E Confirm Direction of Motor Movement

The correct direction of motion on the motion platform using the Mitsubishi Inverter control program buttons is as follows: **Direction of rotation, is referenced with you sitting in cockpit seat.**

1. PITCH: **DOWN** unit moves (nose-down), **UP** unit moves (nose-up)
2. ROLL: **RIGHT** unit moves clockwise, **LEFT** unit moves counter-clockwise.
3. LIFT: **RAISE** unit moves upwards, **LOWER** unit moves down .
4. Counterweight **DECREASE** moves weight toward weldment, **INCREASE** moves weight away from center.

If the direction of movement is incorrect for any axis, reverse any two (2) phases as described in paragraph 2-3B above.

2-5 Encoder wiring

The encoders are wired so that the labeled terminals for A and A-not, B and B-not on the encoder are matched with corresponding terminals on the motion control interface board. All cables return and start at the interface board.

2-5A Encoder Positioning

The pitch and roll encoders are mounted directly to the motor shaft from the rear of the motor so that the encoder is facing the motor from behind The lift encoder is mounted on the drive shaft connecting the motor to the ninety degree gear box. Located right inside rear of ride lower level.

2-5B Encoder Behavior Confirmation

For each axis, the encoder forms a closed loop with the motion control adapter to generate an analog signal that commands the drive motor to move in a specific direction. In the formula EP=DP-AP, (DP is the desired position, AP is the actual position and EP is the error position) a positive EP results in a positive analog signal to move the motor in the direction which will decrease the error.

PITCH: As the unit moves clockwise (up) the encoder reading should return increasing values (positive). The clockwise Positive registry entry for the axis is set to 1 for true.

ROLL: As the unit moves clockwise the encoder reading should return increasing values (positive). The clockwise Positive registry entry for the axis is set to 1 for true.

LIFT: As the unit moves up, the encoder reading should return decreasing values to the registry, where in the software we reverse the appearance of the encoder reading using the Clockwise Positive registry entry for the axis (set to 0 for false) so that in the application we will see increasing values when the unit is going up in inches not degrees..

If the value moves in the opposite direction, check the clockwise positive registry entry for that axis. If it is set correctly, check the encoder wiring.

2-6 Mitsubishi Inverter Information

2-6A Appearance and Structure

(1) Front view

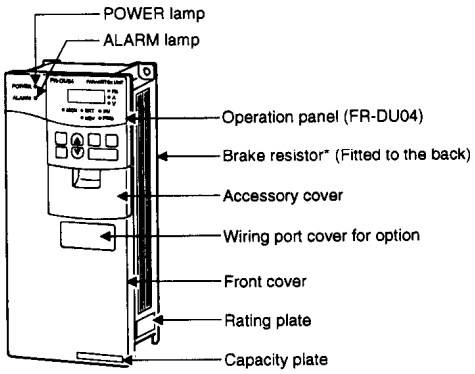

(2) Without front cover

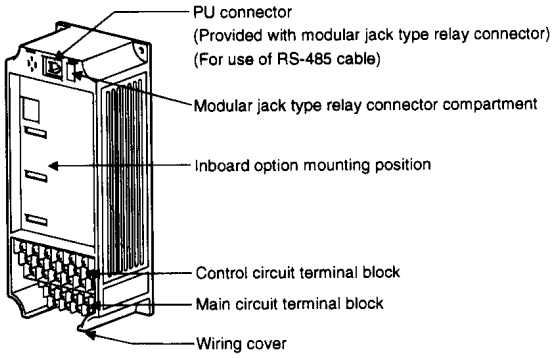

2-6B Removal of the Front Cover

The inverters are designed to work without the front cover in your MaxFlight simulator, and they should already be removed and shipped in a separate package. Remove the front cover from new inverter as follow when replacement is needed.

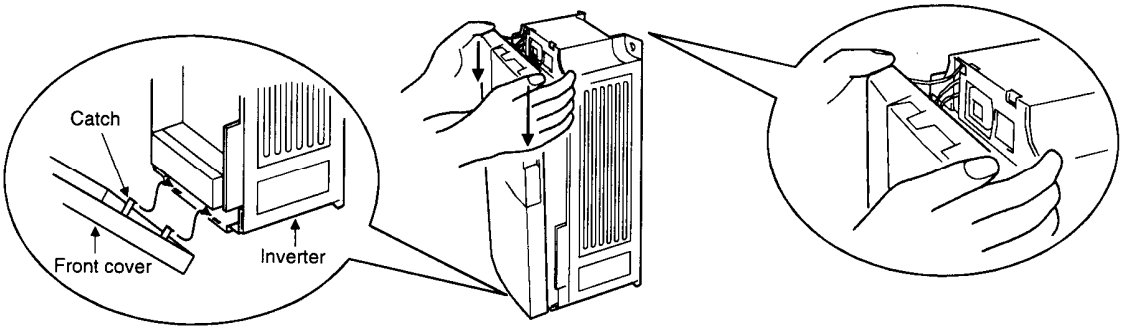

1) Hold both sides of the front cover top and gently push the front cover down.

2) Hold down the front cover and pull it toward you to remove. (The front cover maybe removed with the PU (FR-DU04) on.)

2-7 Inverter Replacement

The inverter can be changed with the control circuit wiring kept connected.

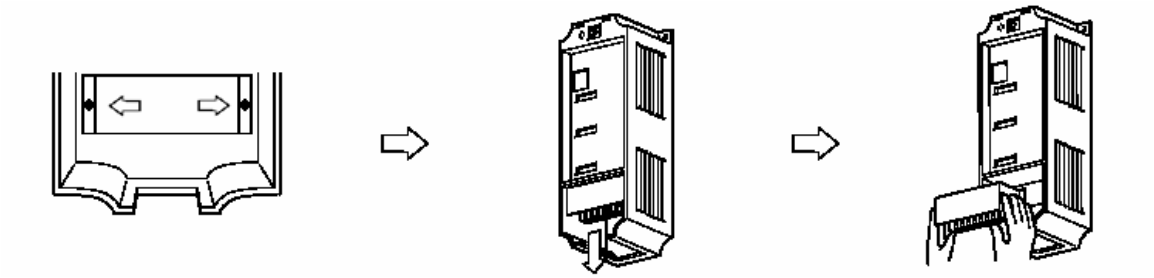

1. Remove the mounting screws in both ends of the control circuit terminal block.
2. With both hands, pull down the terminal block from the back of the control circuit terminals.
3. When installing the terminal block to a new inverter, exercise care not to bend the pins of the control circuit terminal block connector.
4. Disconnect all main circuit terminal wirings.
5. Unscrew the 4 mounting screws at the corners and remove the inverter unit.
6. Mount the new inverter.
7. Rewire the main circuit. See wiring diagram for jumper removal directions.
8. Reconnect the control circuit terminal block and tighten the screws.

After physical replacement of the inverter, it has to be configured to work for your simulator. The operation panel (FR-DU04) is necessary to initialize this process, so make sure you familiarize yourself with the panel with the attached information at the back of this manual. Also see paragraph 3-8.

2-8 Setting Parameters with the Operation Panel (FR-DU04)

When you replace an old inverter with a new unit, the inverter needs to be configured properly with the right parameter settings. These settings are saved in the inverter memory. Since there are approximately 300 parameters, ask for technical support if you feel uncomfortable with the inverter operation panel or using a personal computer. For operation panel (FR-DU04) operating instruction, check manual sent as part of the documentation package.

The operation panel can access and configure any settings stored in the inverter memory, extra hardware is not necessary to reconfigure your new unit to the same condition as your old drive. However, changing 300 parameters with the panel is a time consuming process. To get around this, a computer software program can be used to upload the settings. **See paragraph 3-10, Accessing Frequency Control Settings.**

However, a few parameter settings with the operation panel are required to initialize the communication with the new inverter para. 2-8A. Once all the parameter settings are loaded for the new inverter, you must perform an Auto Tune procedure, of the new inverter/motor combination. **See paragraph 3-11, Auto Tune of Drive**. The following instruction shows how to initialize the unit:

2-8A Initial Configuration of Mitsubishi Inverters

The Mitsubishi Inverters must be manually configured before they can communicate over the RS-485 connection to the computer. This configuration is performed using the FR-DU04 Control Panel. The Control Panel is connected to the inverter using an 8- pin straight through RJ-45 cable, or by directly mounting the Control Panel on the inverter using the straight through RJ-45 plug included with each inverter. It can only be connected to a single inverter at a time.

There are four (4) parameters that must be manually configured before the computer will talk to any respective inverter. Following the steps outlined below manually configure the four initial parameters.

1. Enter the parameter setting mode. Press the **MODE** button until "Pr" appears in the display.
2. Select the Parameter Number. Press the **SET** button to directly enter a parameter number one digit at a time. The **UP** and **DOWN** buttons will move the flashing digit up or down. Press **SET** button again to move to the next digit.
3. After the Parameter number is et, press the **SET** button to display the selected Parameter Value.
4. Use the **UP** and **DOWN** buttons to adjust the parameter value.
5. Save the new value. Press the **SET** button and hold it down for at least 1.5 seconds. When the value has been saved, the Control Panel will beep and display will begin to flash between parameter and the value.
6. Press the **SET** button once to change the Parameter Number using the **UP** and **DOWN** buttons, then continue at Step 3; or Press the **MODE** button 5 times and continue at Step 2 to directly enter a Parameter Number.

Figure 4 Key Operation (FRU-DU04) NOTE pg 47, Mitsubishi Inverter Manual.

NOTE: To insure that the entered values take into EPROM memory of the inverter you must hold the set button for approximately two seconds or until parameter number and set value numbers flash back and forth.

1. Power up the inverter.
2. Connect the operation panel to the PU connector on the inverter by using a standard 10Base-T networking cable (or the modular jack type relay connector that comes with the unit), the panel LED display should come on upon the connection.
3. Change to parameter setting mode by using the MODE key.
4. Set parameter write disable selection (Pr.77) to **2.**
5. Set station number (Pr. 117) according to its driving axis**. (Pitch=0, Roll=1, Lift=2, Counterweight=3)**
6. Set number of communication retries (Pr. 121) to **9999.**
7. Set communication check time interval (Pr. 122) to **9999.**

Important: The inverters must be reset (powered off then back on) in order for changes to Parameter 117 (Station Number) to take effect.

8. Disconnect the operation panel, reconnect the RS-485 communication cable between the RS-485 terminal outlet and the PU connector.
9. Make sure there is a connection between the RS-485 communication port and the computer running the inverter setup program.

2-9 Checking the Operation Panel Display at Alarm Stop

The alarm code is displayed on the operation panel to indicate the cause of a faulty operation. Clear up the cause and take proper action. See Mitsubishi Inverter Manual attachment for error code table.

For a history log of recent alarm stops, access the HELP MODE menu with the operation panel FR-DU04. Or, run the VFD program, this will give you the last eight stored faults.

After you have replaced and initialized the new inverter (paragraph 2-8A), you must verify that the rest of the settings for that inverter are correct. Since there are over 300 possible settings, you can use the control console computer to access the inverter and its settings, and make changes as needed for proper operation of inverter and the system. The following information is critical, you must address the correct inverter to check or make changes. This is done by knowing the inverters address, where it is located and how the computer finds each separate inverter. **Since there are four frequency drive inverters you must follow these addresses and have the correct part number listed for each axes. They are as follows:**

1. Node 00 --- is for the Pitch Inverter, **Inverter part number (Standard) FR-A520, size 3.7/ (Foreign) FR-A540,size 3.7**
2. Node 01 – is for the Roll Inverter, **Inverter part number (Standard) FR-A520, size 3.7 (Foreign) FR-A540, size 3.7**
3. Node 02 – is for the Lift Inverter, **Inverter part number (Standard) FR-A520, size 3.7 (Foreign) FR-A540, size 3.7**
4. Node 03 – is for the C/W, **Inverter part number FR-E520, size 0.1 (All)**

<u>NOTE! The inverter part numbers may vary if you are using this unit on foreign power ie: 220, 380, 440 or 477 VAC. Check install order for verification.</u>

2-10 Accessing Frequency Control Parameters

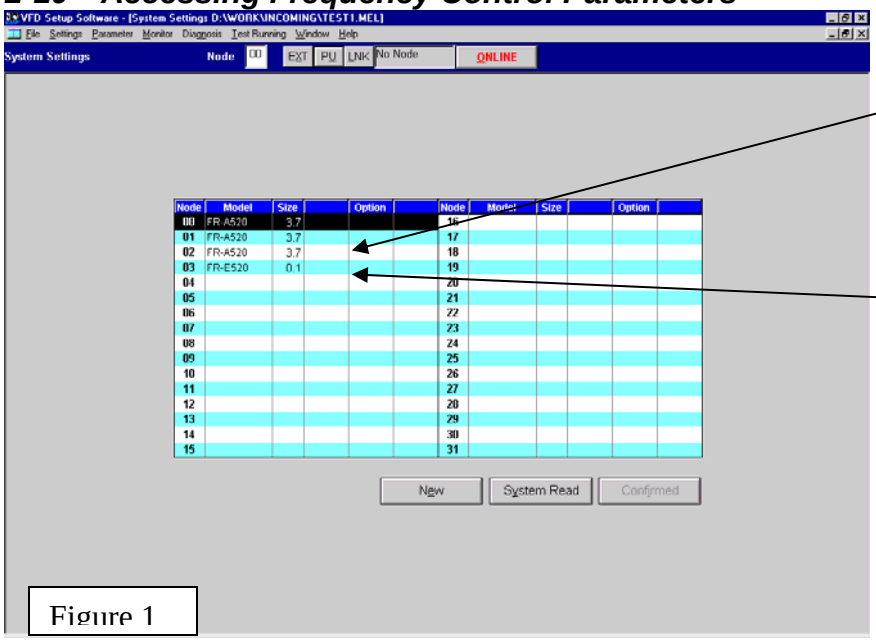

These part numbers must be correct before proceeding. If not a fault will be displayed or wrong data loaded

If information must be changed, click on corresponding part and from pull down select the correct number/part.

NOTE: The correct numbers are listed in the following paragraph.

Figure 1

NOTE!!! It is important that you use the correct "NODE" address when using the following program.

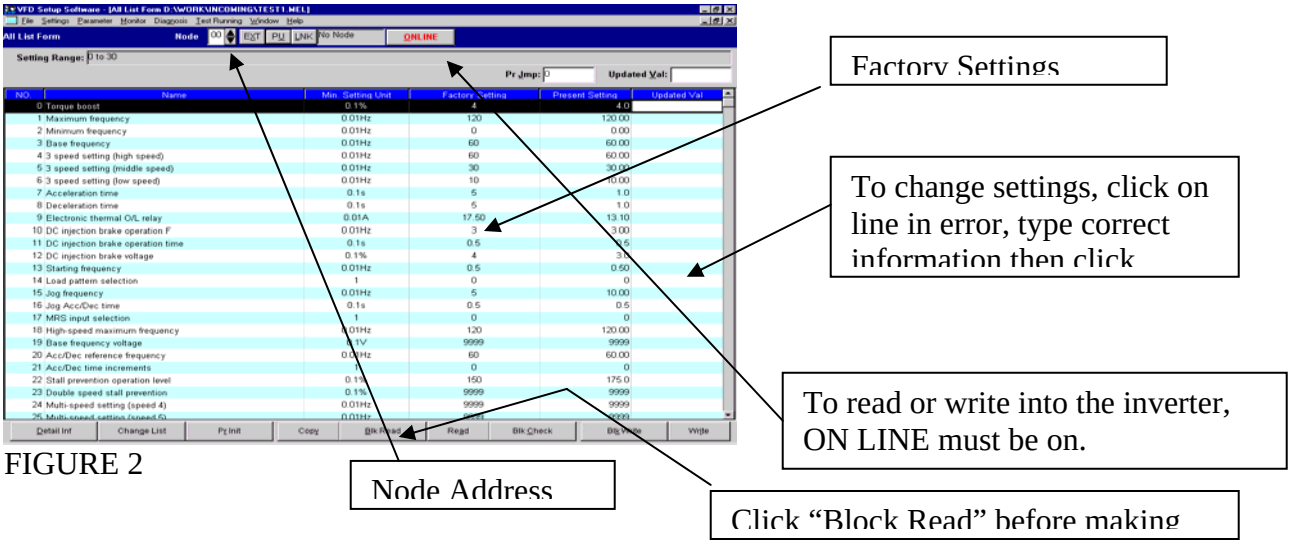

FIGURE 2

To open the **"Mitsubishi Frequency Control Interface Program"**, follow these steps.

1. Ensure that the inverter is mounted, hooked up and initial parameters are installed.
2. Computer, on the control console must be up and running in desktop mode
3. Double click on "VFD Setup S_W " icon, this initiates the interface program. Or if the icon is not on desktop, Click **START / Programs / VFD Setup S_W / VFD Setup S_W.**
4. Click on "**OFF LINE**" box, it will change to "**ON LINE**".
5. All the legends at the top will darken and become available
6. Press the **System Read** button to identify all inverters connected to the computer. After the operation completes, the node listings must be as shown above for respective node and part number.

Note: If the computer cannot communicate with one or more inverters, a timeout error message will appear on the screen, or the inverter may not have been found at all and will not appear on the list. This usually indicates either a wiring problem or a communications configuration error (see Initializing Mitsubishi Inverters) para 2-8A.

7. Open the Parameter List using the menu option **Parameter / All list Format.**
8. Where it says "**NODE 00, 01, 02, or 03** scroll up or down until you have the inverter that you want to test and/or make, check settings or make changes in listed settings page. Select a **NODE.**
9. Press the **Copy** button at the bottom of the window.
10. Select the **MAXDFLT.MEL** configuration file that contains the configuration settings for all parameters. (This file is installed by the MFMotion Distribution CD setup program and is located in **C:\Program Files\MaxFlight\MFMotion\MAXDFLT.MEL** and if using the CD is located on CD as either **Start.MEL** or **Foreign. MEL**. Or, you may use a floppy in drive "A" and copy the STANDARD.MEL from it that you had saved when machine was first installed.
11. Verify that the node/address of inverter is the same as the little window that opens after you said OK. If not click on right arrow and change it to match the above center node you are working with. Click OK and numbers will write in far right column.
12. Click **Block Write** bottom right, the numbers will transfer to present setting after you click on OK to write over.
13. Repeat step 10-12 till all inverters are set with their values.

NOTE!!! BE SURE YOU READ THE CORRECT SETTINGS PAGES, AND ASSOCIATED LINE (PARAMETER SETTING) BEFORE MAKING CHANGES IN THE PROGRAM.

14. When completed to the end of the file, you must now perform an "**AUTO TUNE**" test of inverter circuit and associated drive motor. **See paragraph 3-11.**

After Auto Tuning, save a copy of the configuration settings on the local machine. Select **File / Save As…** from the menu and enter the name **"Standard.Mel"** in the File name field. The default folder C:\INVSUPE should be selected. Press **OK.**

If you desire to select" STANDARD.MEL" as the default settings on the local machine. Select **Settings / Environmental Settings…** from the menu, press **Browse** button to select "STANDARD.MEL" and press **OK**. Then press the **OK** button in the Environmental Settings window. In the future, this file will be opened automatically when the Mitsubishi Freq Rol program is run.

2-10A Parameter Configuration

This is a list of all parameters that are applicable to our usage of the inverters.
Items shown in BOLD are different than the default settings.

Parameter	*Description*	*Pitch*	*Roll*	*Lift*	*Weight*
7	Acceleration time	**1.0**	**0.1**	**0.1**	**1.0**
8	Deceleration time	**1.0**	**0.1**	**0.1**	**1.0**
9	Electric thermal O?L relay	**13.1/6.5**	**8.5/4.2**	**8.5/4.3**	**0.7**
10	DC injection brake operation	4	1	**1**	3
12	DC injection brake voltage	**4.0**	**3.0**	**3.0**	**3.0**
15	Jog frequency	**10.00**	**10.00**	**10.00**	**60.00**
16	Jog acceleration/deceleration time	**.5**	**.5**	**5**	**0.1**
22	Stall prevention level	**175**	**175**	**175**	**0**
29	Acceleration/deceleration pattern	1	0	0	0
30	Regenerative function selection	**1**	**1**	**1**	**0**
60	Intelligent mode selection	0	0	0	0
70	Special regenerative brake duty	**30.00**	**30.00**	**30.00**	
71	Applied motor	**13**	**13**	**13**	**3**
72	PWM frequency selection	**11**	**11**	**11**	**15**
73	0-5V/0-10V selection	**14**	**14**	**14**	
77	Parameter write disable selection	**2**	**2**	**2**	**2**
79	Operation mode selection	**1***	**1***	**1***	**1***
80	Motor capacity	**3.7**	**3.7**	**2.2**	**0.1**
81	Number of motor poles	**4**	**4**	**2**	
82	Motor exciting current***				
83	Rated motor voltage	**230.0**	**230.0**	**208.0**	**208.0**
84	Rated motor frequency	**60**	**60**	**60**	**60**
90	Motor constant (R1)***				
91	Motor constant (R2)***				
92	Motor constant (l1)***				
93	Motor constant (L2***				
96	Auto tuning setting	**3**	**3**	**3**	**1**
117	Station number	0	**1**	**2**	**3**
121	Number of communication retries	**9999**	**9999**	**9999**	**9999**
122	Communication check time	**9999**	**9999**	**9999**	**9999**

	interval				
145	PU language select	**1**	**1**	**1**	**1**
190	RUN terminal function selection	0*	0*	0*	0*
192	ABC terminal function selection				
195	ABC terminal function selection	99	99	99	
244	Cooling fan operation selection	**1**	**1**	**1**	**1**
903	Frequency setting voltage gain	**120.0**	**120.0**	**180.0**	60.0

Changed 4 Oct. 00

* Parameters 79 and 190 are adjusted during operation by the MFMotion software and may vary after the unit has been operated once after initial configuration. It is usually not necessary to reset these values again.

*** Parameters 82, 90, 91, 92, and 93 are configured during auto-tuning and are only visible and updatable while parameter 77 is set to 801. They can be configured directly instead of auto-tuning the inverter. If an inverter was auto-tuned, the values may vary from those shown.

NO OTHER PARAMETERS SHOULD BE DIFFERENT FROM THE DEFAULT VALUES.

2-11 AUTO TUNE OF THE INVERTER CIRCUIT

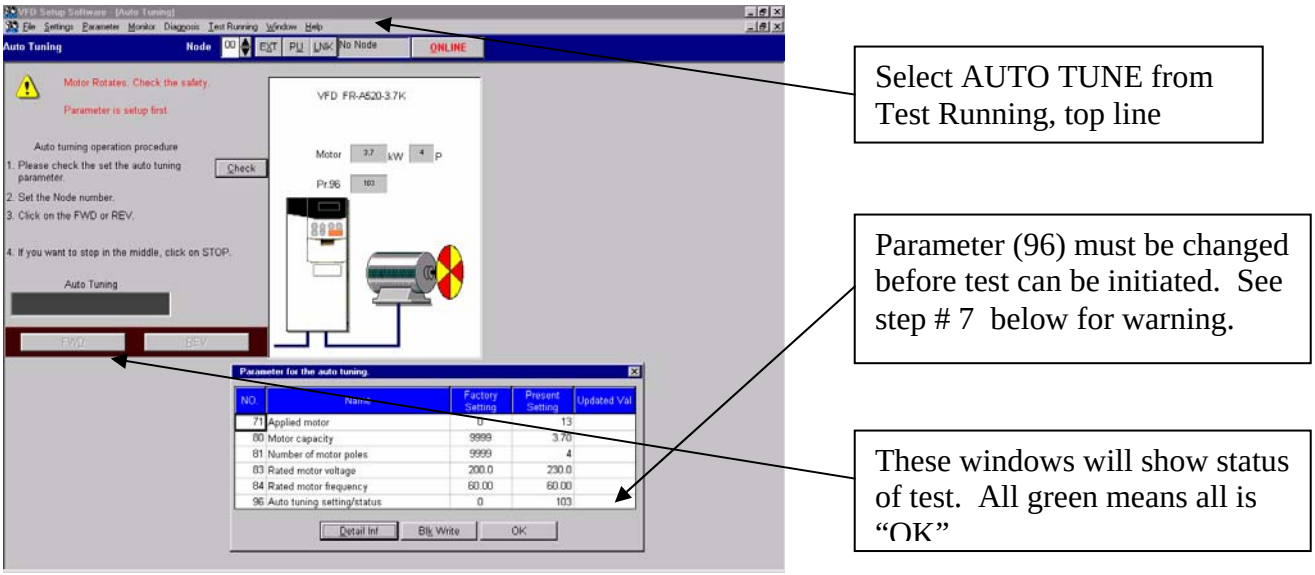

FIGURE 3

After inverter has been replaced, initialized and settings checked, you must perform an "AUTO TUNE" of that inverter. This is required so that the inverter memory knows the voltage values, motor current draw, RPM of motor and knowledge of all associated wiring. This must be completed before you can use that inverter drive in our regular program. Perform the test in the following sequence. It is imperative that there are no persons near the motion platform for this test.

WARNING: During the following test it is possible that the motion platform could move due to inadvertent actuation of the drive motor being tested. All personnel must stay clear of all rotation planes associated with this unit. Injury or possible death of person/s is very possible.

Perform the "**AUTO TUNE**" test as follows:

1. Ensure power is applied to the inverters
2. Ensure inverter is initialized and all parameters have been checked
3. Open the "**Mitsubishi Frequency Control Interface"** program
4. Click "**OFF LINE**" square, it will turn to say "**ON LINE"**
5. Click Block read and the window will state that all program parameters are OK or there is a problem. Click "OK"
6. Click on top row "**TEST SYSTEM**" then select "**AUTO RUN**".
7. Red "X" will show in a window stating for you to enter a change setting in parameter 96
    a. Enter the number "**1" to run auto run without turning the platform**
    b. **Read the above warning before continuing.**

8. When you **entered the number "1**" in parameter 96, click Block write then click "**OK**" . The **FWD** and **Rev** icons will hi-lite.
9. The window now allows you to either initiate a forward or reverse auto run test. Click on either Fwd or Rev this initiates the test.
10. The bottom of the window will show a step of green blocks, this shows you that the system is testing.
11. When all three green blocks are there, another window will state auto run test completed successfully.
12. Close the window by clicking "OK"
13. Repeat the tests for all nodes except NODE #3, counterweight.

Note! Node #3 Counterweight, does not get auto tuned.

14. Close the program by clicking "X" top right. You are now back to all list parameter settings control page.
15. Select Node "00" then "01", "02" in turn and perform the following;
    a. Click extreme right block on line detailing parameter #9.
    b. Enter the value "0.0"
    c. Click on "Write" bottom right, this writes value into present column repeat with next node if required.
16. Click on "File" , "Save As" and save the parameter values on drive "C" as "Standard.mel".
17. Close the program by clicking top right "X", you are now back to desktop, ready to run any other motion program.

2-12 Initializing and starting "Lenze" equipped power boxes

2-12A Lenze Inverter Setup Procedures

If you just completed a new power box setup all inverters must have addresses set. Pitch and Roll inverters must also be auto-tuned when connected to each motor.

Caution! The following setup procedures must be followed or damage to motors will occur. Whenever a new inverter is turned ON, it outputs 25 HZ drive signal at full voltage to the motor. So, it is imperative that no motor/s are connected to the power box until after all inverters have been initialized. **Motors will overheat and be damaged.**

1. Verify Power is "OFF" to the power box.
2. Verify that the dip switches on the lower analog communications module, model E82AFSC010, are set as follows; Fig #1and Fig #2.
    a. From left to right
        i. UP
        ii. UP
        iii. DWN
        iv. DWN

v. DWN

b. The analog terminal connector body is snapped onto the comm. module.
c. The module is connected to the inverter and the shorting plug, (white with pins sticking out) is installed under the lock bar right side of module.
d. Verify the following;
    i. Pitch Inverter,
        1. Red wire to term 8
        2. Blk wire to term 7 and jumped to term 39
        3. Jumper between term 20 and 28
    ii. Lift Inverter
        1. Green wire to term 8
        2. Blk to term 7 and jumped to term 39
        3. Jumper between term 20 and 28
    iii. Roll Inverter,
        1. Blue wire to term 8
        2. Blk wire to term 7 and jumped to term 39
        3. Jumper between term 20 and 28

3. Verify that all motors are disconnected from the power box.
4. Obtain the manual control key pad, model E82ZBC, used for 8200 series vector inverters. Fig #7.
5. Remove the Rs-485, electronic control module, located at the top of the inverter. You may have to loosen the center set screw so that the module can be pulled out. Fig # 3, 4, 5.
6. Verify that the jumper, on left side, is connected to the lower two pins left side.
7. Snap on the manual key pad module.
8. Turn power box power "ON", keypad will show legends.
9. Press "1+2" function bar on keypad.
10. Press "right arrow" will show "User"
11. Press "UP" arrow to change function to "ALL"
12. Press "1+2" function bar again
13. Press "right Arrow"--- parameter line blinks.
14. Press "up arrow" till parameter #009 shows
15. Press "right arrow' to enable value change in parameter #9.
16. Press "up or dwn" arrows to change the value.

<u>Note! The following are the addresses for each inverter that you are working with. TheInverters are mounted in the power box from left to right, Pitch, Lift, Roll and Counterweight.</u>

a. **Pitch--- 1**
b. **Roll------ 2**
c. **Lift----- 3**
d. **Counter weight---- 4**

17. Press "enter" when correct value for that inverter is showing. This will show "Stored" on the screen.

Note! Repeat the above steps until all inverters have the correct address assigned to it.

18. Connect all Comm. modules on top of the inverters. Snapped into place.
19. Turn power "OFF" to power box for two minutes.
20. Verify that all motors are disconnected from the power box

2-12B Loading Parameters into the Inverters

The following steps are required to perform individual/all inverter parameter and auto-tune parameter loading.

21. Turn main computer “ON” and allow it to come to desktop.
22. Open the “DB-Mon” program, Start, Programs, MaxFlight, Tools, DBMon
23. Go to C: drive root and locate “TestLenze208vCom3.exe”, Start, my computer, right click on C:, select Explore, click on C: right column will show the above program.
24. Turn E-stop power to power box “ON”.
25. Verify inverters are powered up, green lights on com module “ON”
26. Double Click on “Test Lenze208vCom3.exe”, program will open in DOS window.
27. It will stop at “Do you want to load parameters? Yes/No. type “Y” and push enter on keyboard.
    a. Window will show “Loading inverter 1 then 2 then 3 then 4
    b. When all inverters are loaded, it will state “Do you want to load auto tune parameters” select “N” and enter.
    c. Do you want to read back parameters, type “N” and enter.
28. Verify in DB Mon program that all is OK, no errors messages.
29. Turn power to power box “OFF” for two minutes.
30. Turn Power to power box back “ON” after a two minute wait. Both the green and red indicator must be on, on all the inverters. This indicates that addresses and initial parameters have been installed correctly and the inverters are all in default “OFF” state. If the indicators are different than mentioned above, repeat steps 23 to 29 till the indicators are correct.
31. Connect all motor and brake power leads to the power box.

2-12C Auto Tuning Lenze Inverters

Caution! Verify that the Lift motor drive coupling is separated from the lift drive shaft.

32. Open “Inverter Test Client Program” on main computer.
33. Turn E-stop power “ON”, to the power box. All inverters power up showing a green and red light on top of the comm. Module. Yellow comm. Lights are blinking.
34. If this is the first time this program has been opened, you may have to load each inverter into the program.
    a. Select, “Inverter” at the top, select load inverters,
    b. Another window opens, select inverters starting with number 1, then 2, 3 and finally 4
    c. Depending on series of inverters installed, 200VAC or 400/500 VAC depends on model selected to load. All are 8200 series.
    d. Select the 8200—400VAC lines.
35. After all inverters are loaded, each column under each inverter must high-light, dark numbers. If they do not, then communication to that inverter is faulted and must be corrected before continuing with tests.
36. Verify steps 30 to 33 are completed, program running and no faults on the inverters comm. Module. IE: blinking green or red light/s.
37. Again locate the “Test Lenze208Vcom3.exe” under C: drive.
38. Double click on the program, DOS window opens, will ask the following questions?
    a. Do you want to load parameters Y/N---type “N” enter
    b. Do you want to load auto tune parameters Y/N----type “Y” enter, auto tune parameters are loaded into the inverters.
    c. Do you want to read back the parameters Y/N---type “N” enter.

NOTE! Make sure that between loading the auto tune parameters and performing the auto tune procedure, the power to the power box was not turned off. If it was you must go back and repeat the loading procedure for auto tune steps 34 to 36.

NOTE! You only auto tune pitch and roll inverters, not the rest.

39. In Inverter Test Client program, under pitch inverter, click on “Start” at the top. The following will happen.

    a. Change from Start to Stop high-lighted
    b. The values in the lower columns will change
    c. When the value in the “Current” line goes and stays at zero, click the “STOP” icon at top
    d. You have just auto tuned the pitch inverter.

40. Repeat the above procedure this time under “ROLL” inverter.
41. When auto tuning has been completed, power can be shut down to the box or other tests can be run.
42. Shut down all programs to desktop.

2-12D Rotation Test of all Motors

43. Verify that the drive coupling on lift is separated at the motor end. This is required to prevent the motor from lifting the lift jacks out of the “C” channel down locks should rotation be wrong.
44. Verify that the manual lift brake release knob is horizontal or “ON”.
45. Verify that you have waited at least two (2) minutes with power off .

Caution! We are testing the motors rotation in the following procedures. Steps must be followed or damage to the equipment will result.

46. Open the “Inverter Client Program” on the computer.
47. When all the legends on the inverter columns are legible, communication between computer and inverters is live.
48. First to test is the counterweight drive system. Press “FWD” and the weight must come towards the cockpit. Press “BACK” and the weight must go to the rear of the machine.

Note! Should travel be wrong, change two motor leads on the output side of the C/W inverter in the power box. Retest for correct travel.

Warning! You must lower and lock the canopy of the cockpit for the following test steps. If not, severe damage to machine or personal injury could occur.

49. Manually balance the platform for next tests.

NOTE! Next test is lift system. Correct rotation is imperative before assembling lift coupling on drive system.

50. On Lift inverter , click on “RAISE” and the motor shaft must turn clockwise rotation, when observing standing behind the motor.

Note! If rotation is wrong, pull out the lift motor connector from the power box receptacle, open the connector. Swap any two power leads on the connector and re-assemble the connector. Install back in receptacle on the power box.

51. Retest lift motor rotation by clicking “RAISE” motor must turn clockwise.
52. When rotation is correct on lift motor, assemble the rest of the lift system for further test.
53. Turn power box power “OFF” when assembling the lift drive system.
54. Verify and inspect the lift drive system for correct installation and tighten all couplings and backup sleeves on lift cross shaft.
55. Turn E-Stop power back “ON”.
56. Verify that machine is manually balanced. You should be able to move machine up and down in pitch using just two fingers on the front handle. If not, using counterweight inverter in Inverter Test Client, click FWD or BACK till platform is manually balanced.
57. Click “RAISE” on lift inverter, machine starts going up.
    a. Raise machine half way and click stop.

b. Inspect both sides for cable drip loops and clearance and that nothing has been placed on top of the pitch motor/gear case.

Caution! When doing the next step, you must visually monitor lift progress. As soon as the machine touches the upper lift stops, you must press "STOP" on lift inverter. Damage to machine may result if you fail to stop lift in time.

58. Click "RAISE" again, machine moves up again. When machine is at the top stops, press "STOP" on lift inverter immediately.

Note! All references to rotation is you sitting inside the cockpit.

Caution! Verify that there are no obstacles or personnel in the way of machine rotation plane. Damage to the machine or injury to personnel will occur.

59. On roll inverter column. Press "LEFT" icon the machine cockpit must rotate left. To stop rotation click on "STOP" icon.
60. Press "RIGHT" icon, machine rotates right. To stop rotation click on "STOP" icon.

Note! If rotation is incorrect, remove roll motor power connector from receptacle on power box and swap two power leads. Reassemble connector and plug back in. Retest steps 59 and 60.

61. If rotation is now correct go to next test.
62. On pitch inverter column, click on "UP" icon, machine must move upwards. Click "STOP".
63. Click on "DOWN" icon machine must move downwards. Click "STOP".

Note! If rotation is wrong, remove pitch connector, open and change two power leads , reassemble connector and plug it back in. Retest steps 62 and 63.

64. If all the rotation steps are correct, close the program.
65. Remove power to the power box, press E-stop in.

Caution! If the machine lowers too fast immediately release the brake knob to apply lift brake. If lowered too fast damage to the lift motor and/or gear box will result. Lower in 6" increments till down.

66. Manually level platform in pitch and roll.
67. Manually lower the machine by turning the lift brake release knob clockwise slowly until machine starts lowering. Bring machine all the way down to the stops. Release lift brake knob and verify that it is horizontal.
68. The next test that must be accomplished is running the machine using the "Motion Client Test Program". This test will verify that all the encoders interact correctly within the motion program, and that all sensors are working correctly and seen .

2-12E Automatic Motion Encoder Response Test

1. Open the "Motion Client Program"
2. Verify power box power is ON, window in motion client states "On Available".
3. Test all sensors by activating them manually and verify check shows up in respective sensor boxes right column in program window.
4. Verify lowered sensor reads in program.
5. Click on raise Icon, machine goes up to balance point and balances.
6. After balance platform raises to the top and stops.
7. Both UP Sensors must be visible. If not adjust sensors accordingly till they show in program.
8. Click "STOP" in lift portion.

9. Click “Start” the “Run” in free flight portion, left side. Platform is now in free flight and should remain level in pitch and roll.
10. Click and hold the click on the horizontal icon button, drag it to the left extreme, machine will roll 360 degrees and stop.
11. Click the X icon lower right corner, icon platform will remain and icon returns to center.
12. Click and hold the click on the vertical icon button, drag it to the UP to stop, machine will pitch 360 degrees up and around and stops.
13. If the machine follows smoothly then the encoders are correctly installed and working properly.
14. If any one axes, runs away, does not follow smoothly, an “Motion Error” alarm comes on, then that axes encoder may be installed wrong, loose or not hooked up.
15. If all tests passed, then click “STOP” on left lower icon, the “Lower” and “STOP” icon at top will come back on.
16. Click on “LOWER” and the machine will come down to the supports and stop. The program will reset to default as soon as it sees the “Down Sensor”. Ready for another run.
17. No further tests required, shut down the program to desktop.
18. Shut power “OFF” to the power box.
19. Machine is now capable of running any/all flight or roller coaster programs.

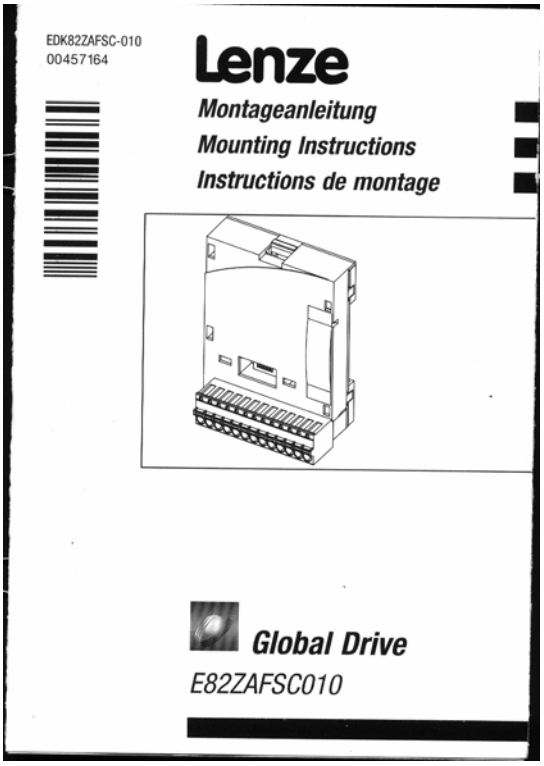

Fig 1. Analog Control Communications Module

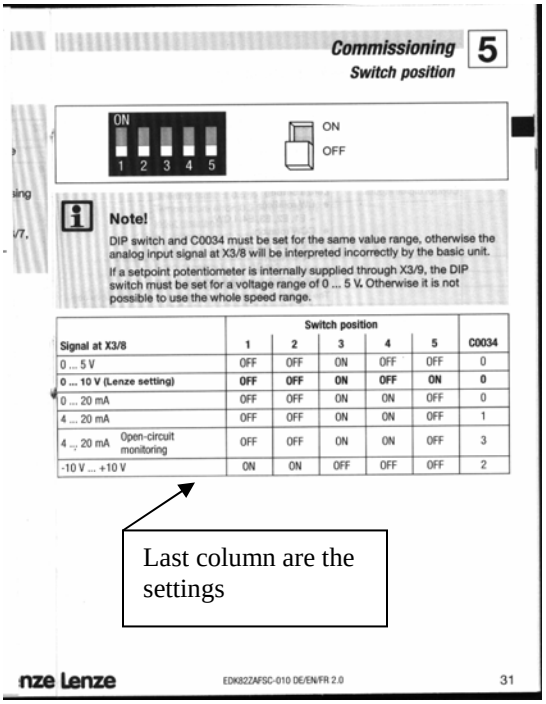

Commissioning 5

Switch position

ON

1 2 3 4 5

ON

OFF

Note!

DIP switch and C0034 must be set for the same value range, otherwise the analog input signal at X3/8 will be interpreted incorrectly by the basic unit.

If a setpoint potentiometer is internally supplied through X3/9, the DIP switch must be set for a voltage range of 0 ... 5 V. Otherwise it is not possible to use the whole speed range.

Signal at X3/8	Switch position 1	2	3	4	5	C0034
0 ... 5 V	OFF	OFF	ON	OFF	OFF	0
0 ... 10 V (Lenze setting)	**OFF**	**OFF**	**ON**	**OFF**	**ON**	**0**
0 ... 20 mA	OFF	OFF	ON	ON	OFF	0
4 ... 20 mA	OFF	OFF	ON	ON	OFF	1
4 ... 20 mA Open-circuit monitoring	OFF	OFF	ON	ON	OFF	3
-10 V ... +10 V	ON	ON	OFF	OFF	OFF	2

Last column are the settings

nze Lenze EDK82ZAFSC-010 DE/EN/FR 2.0 31

Fig 2. Dip switch settings on the analog module.

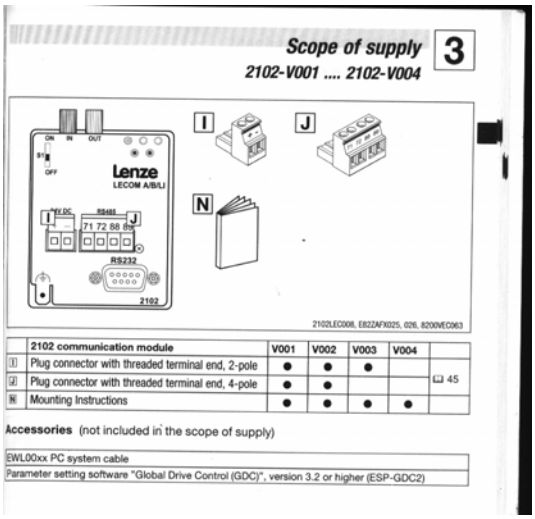

Scope of supply 3

2102-V001 .... 2102-V004

2102LEC008, E82ZAFX025, 026, 8200VEC063

	2102 communication module	V001	V002	V003	V004	
I	Plug connector with threaded terminal end, 2-pole	●	●	●		45
J	Plug connector with threaded terminal end, 4-pole	●	●			
N	Mounting Instructions	●	●	●	●	

Accessories (not included in the scope of supply)

EWL00xx PC system cable
Parameter setting software "Global Drive Control (GDC)", version 3.2 or higher (ESP-GDC2)

Fig 3. RS485 communication module.

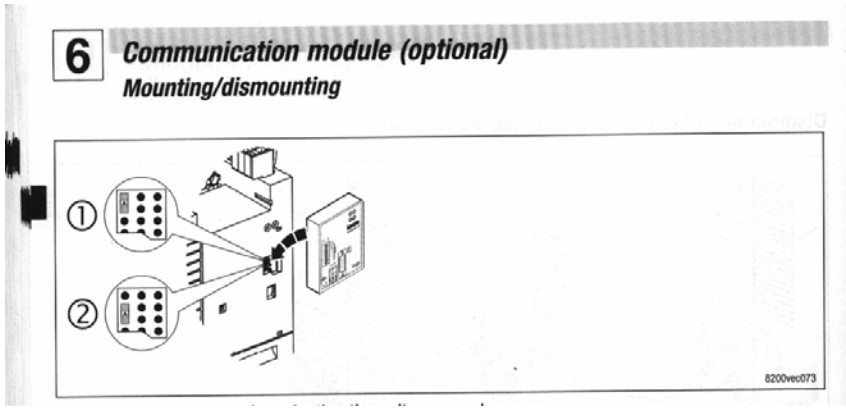

Fig 4. Jumper location under comm. Module before installing module.

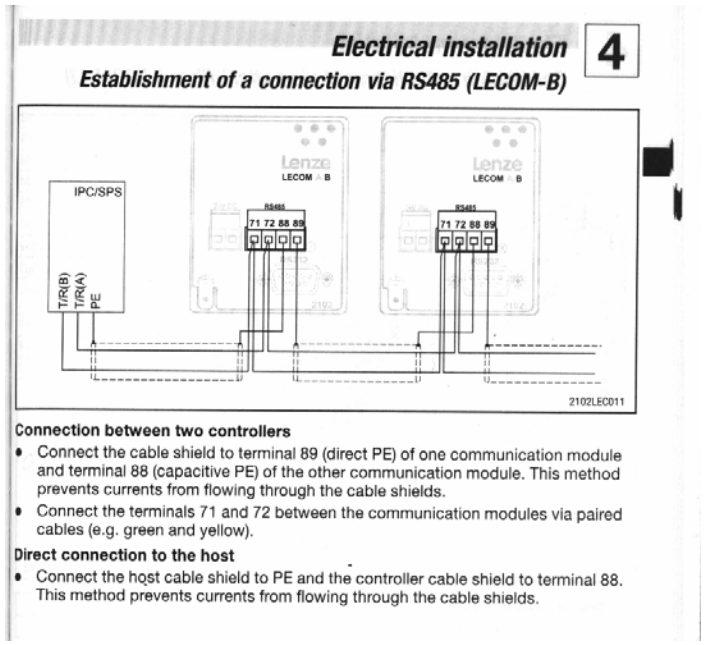

Fig 5. RS485 shielded wiring setup between units.

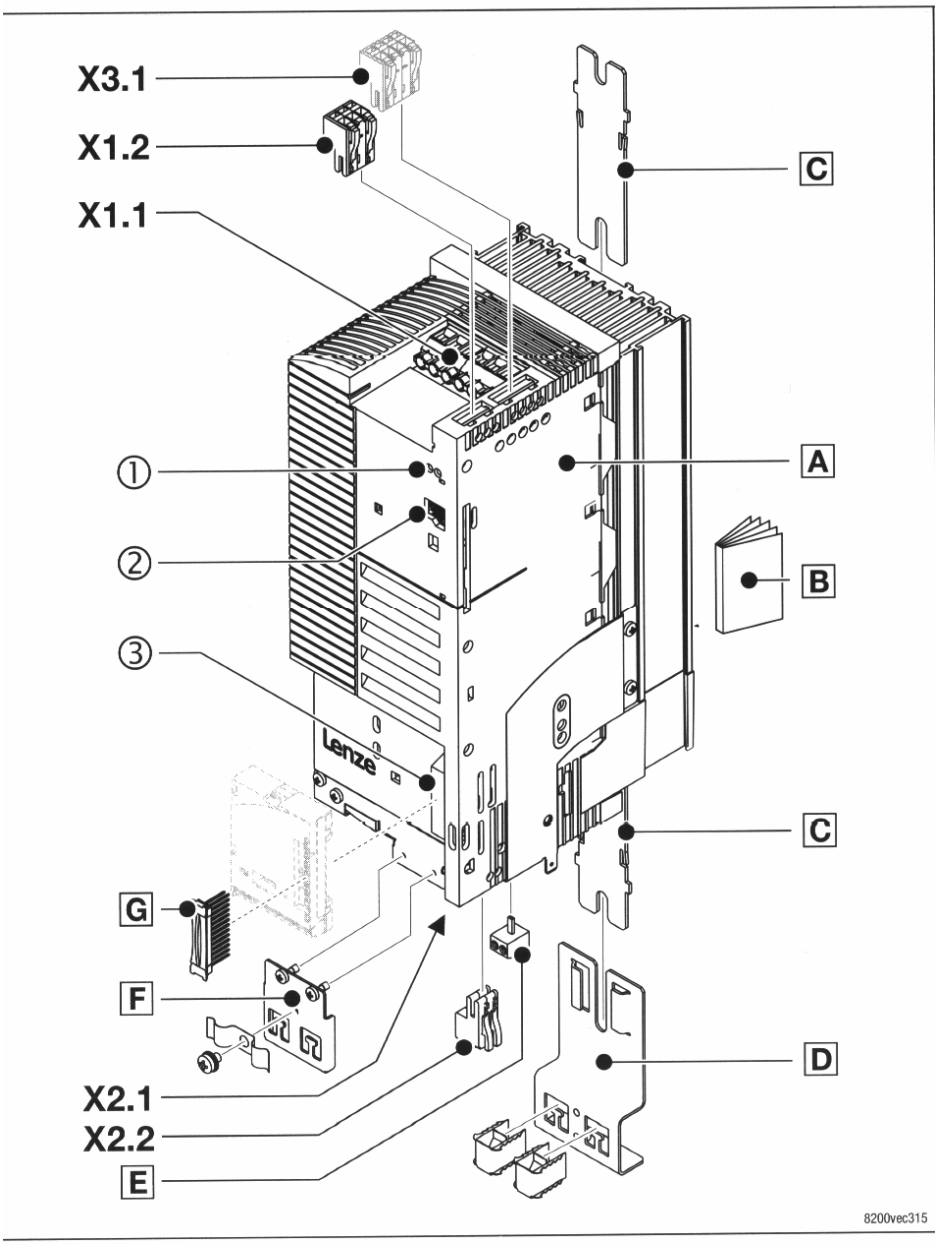

Fig 6. Global Drive 8200 Vector, 3.7KW.

7 Commissioning

Using the keypad E82ZBC - Parameter setting

Description

The keypad is available as accessory. A full description of the keypad can be obtained from the Instructions included in the keypad delivery.

Plug in the keypad

It is possible to plug in the keypad onto the AIF interface or remove it during operation.

As soon as the keypad is supplied with voltage, it carries out a self-test. The keypad is ready for operation, if it is in display mode.

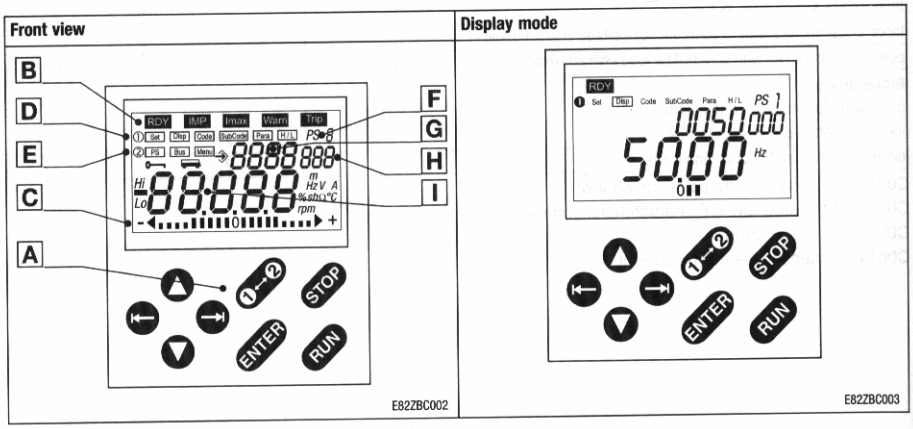

Fig 7. Manual key pad module.

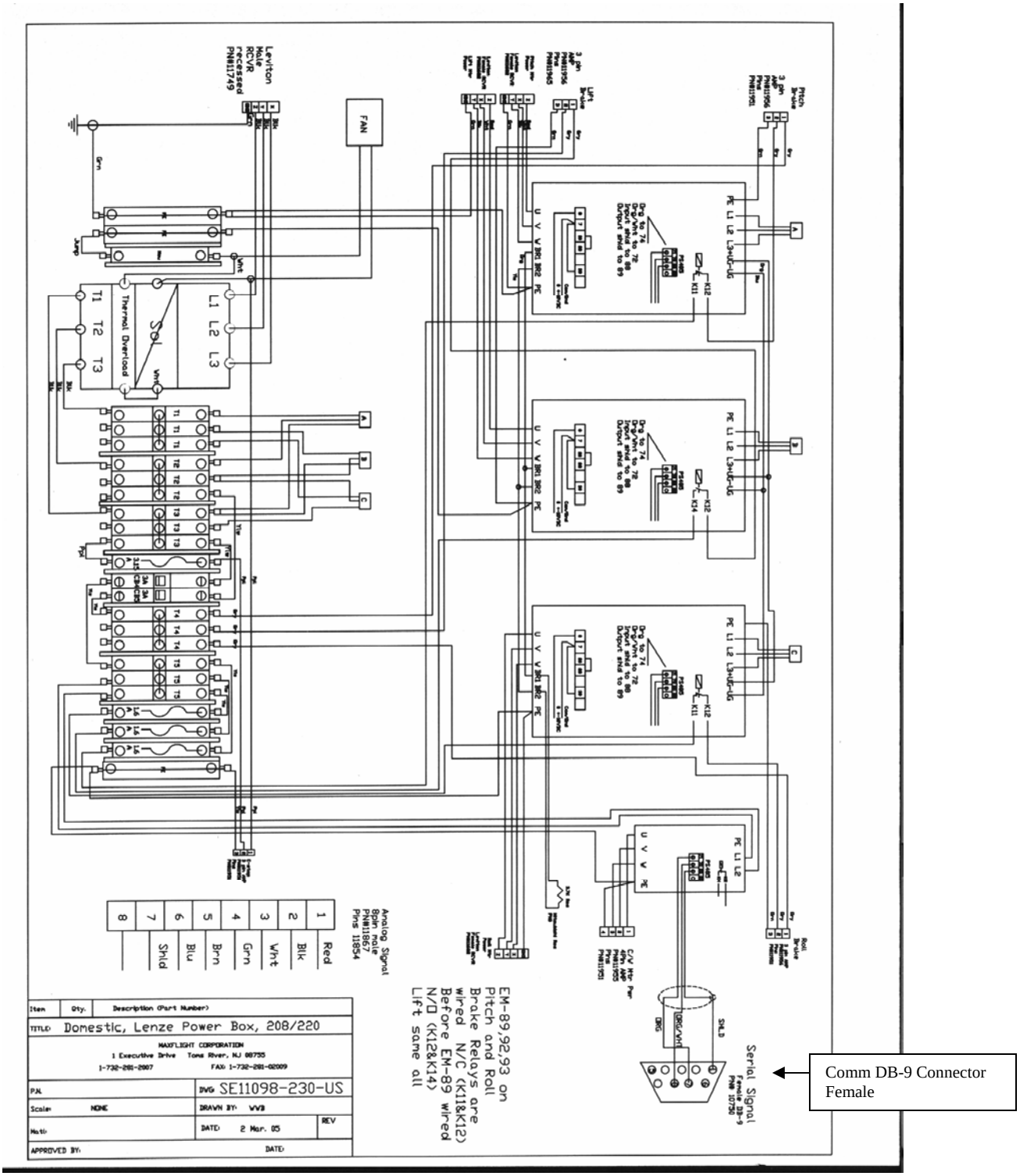

Comm DB-9 Connector Female

Lenze Power Box Showing Communications and associated wiring. (Without OPTO Relays)

CHAPTER 3 MECHANICAL

3-1 Mechanical are those bits and pieces such as nuts, bolts, machined parts and cabinetry that when assembled correctly make up the major portion of the flight simulator that one sees. These are the important parts that give the unit substance.

1. "A" frame two each, right and left. See drawing DET-014.
   These are assembled from the parts listed in the drawing and make up the supporting backbone of this machine.
2. Center weldment. See drawing DET-017
   Manufactured part by machine welding various machined plates together. The pitch shafts, tail shaft and counterweight and roll motor and hub assembly are bolted to this unit.
3. Pitch arms two. See drawing DET-016,017.
   Manufactured part. Left side has tail shaft with keyway for the pitch motor mounting and grooved for the spring retaining clip. It also has mount for the signal pitch rings. Right side is drilled so that set screws can be inserted into power ring adapter. The shafts are bolted and safety wired to the center weldment.
4. Tail shaft. See drawing DET-017,018.
   Machined part, supports the counterweight, H frame at the rear. Through the center passes a threaded rod that retains in place the tail shaft retention plug. Bolted and safety wired to the center weldment.
5. H frame assembly, attached to the tail shaft. See drawing DET-018,017.
   Is the mounting support for the tail boom cover, the counterweight drive screw rear alignment plate and the counterweight side alignment bar.
6. Counterweight gear and gear box.
   Sole function is to move the counterweight forwards and rearwards on the tail shaft. This allows the machine to balance about the pitch shaft axis.
7. Counterweight @400 pounds. See drawing DET-017.
   Machined and welded steel plates. Contain slide bushings and a mount for drive clutch at the top. Its function is to counterbalance the weight of the cockpit area.
8. Chair assembly. See drawing DET-040,041,042.
   Machined and welded aluminum square tubing and plates. This is the main support for the entire cockpit area.
9. Seat back assembly. See drawing DET-040,041,042.
   Interface between the roll hub and the seat frame assembly. Transmits roll motion to the cockpit area. Supports the entire cockpit assembly.
10. Lift drive network. See drawing DET-047,048. See paragraph 3-2 for detailed installation.
    This moves the entire motion platform in the vertical axis up or down.
11. Roll motor mounting. See drawing DET-045.
    Held to the center weldment by four bolts. Acts as the roll motion generator and the rear pivot mounting for the roll hub assembly.
12. Pitch motor mounting. See drawing DET-011.
    Pitch motor is mounted to the left pitch shaft, by the pitch shaft going through the center of the pitch gearbox. Prior to mounting, pitch shaft is coated with antiseaze compound.
13. Roll hub assembly. See drawing DET-045.
    A machined steel part. Transmits roll motion to the cockpit area ,holds the roll slip rings, is bolted to the seat back assembly and passes through the roll motor gearbox.
14. Fiberglass cockpit shells. See drawing DET-040.
    A manufactured series of fiberglass panels, bolted together to form the upper and lower cockpit shell assemblies. It is mounted to and completely encloses the seat frame assembly.
15. Front stand. See drawing DET-005,013.
    Assembled steel frame. Supports the front of the lower cockpit. This unit is adjustable and controls the initial roll encoder alignment during startup of raise command.

16. Rear stand. See drawing DET-010.
    Works in conjunction with front stand. Supports the tail boom and cover when motion platform is in the lowered position.
17. Entry stair assembly. See drawing DET-013.
    Manufactured wood product. Enables patrons easy access and egress from the motion platform cockpit.
18. Cabinetry. See drawing DET-012,009.
    Encloses the right and left "A" frame and its contents. Gives a pleasing visual effect to the machine. Manufactured from wood product.
19. Control Cabinet and Kiosk. See drawing DET-006.
    These cabinets are manufactured wood product. Designed to hold all the controlling electronics for the motion platform.

3-2 Lift Component Installation Procedures

The lift components consist of action jack assembly, jack lift tube to pitch lift block assy., cross drive shaft, 90 degree gear box, main drive shaft to motor coupling and 3HP lift motor. In order to assure a smooth operation of the lift system the following installation procedures must be followed. References will be made to various drawings that are part of the installation manual.

a. Action jack/lift tube assembly. See DET-043,043A,043B
    i. Position Action Jack flat on a surface with screw portion upwards. Make sure that you do not move the Ball Nut assy. past the top threads or the unit will be damaged by the lift bearings falling out. See DET-043B for detail.
    ii. Raise the ball nut and collar upwards @ 6-8 inches. This will allow access to the recessed mount holes at the bottom of the collar. Support one side with a stick or have someone hold the nut assy. so you can slide the lift tube over screw and onto the collar.
    iii. Allign the four mounting holes and install ¼ x20 allen head bolts with blue loctite and torque into place. Repeat procedure for second unit assy.
    iv. Remove stick and allow lift tube to slowly spin down onto the gear box. Align tube and gear box by turning the input shaft on the gear box.
    v. Install one side of guide plate onto the lift jack tube.
    vi. Place assembly between the two verticals between base and pitch lift block
    vii. Attach lift tube top to the pitch lift blocks using ¼ x 20 lock washers and loctite.
    viii. Align gear box inside torque braces at base and install tie down clips on all corners.

b. Cross lift drive shaft assembly. See DET-047
    i. Lay 4 inch C channel flat on floor.
    ii. Locate and install Nylon pillow block bearings, spacer plates in pre-tapped locations inside C channel using ¼ x 20 allen bolts, flat and lock washers plus loctite.
    iii. Feed the ½ inch drive shaft through the center of each bearing.
    iv. Install six 5/16 inch allen bolts in locations provided . Used as leveling posts at install.
    v. Locate and place on left side of shaft ½ inch bore coupling, key fitted to coupling and shaft keyway and one backup lock collar.
    vi. Place a ½ inch lock collar onto the left input shaft on gear box. Allow @ 1/8 inch space between collar and gear box. Torque screws using loctite.
    vii. On right side of drive shaft (gear box end) locate and place a lock collar, key and star drive half coupling. Fit key to star coupling and keyway on shaft. Friction fit so you can align items by hand.

viii. Locate and install finger tight gear box to C channel mounts. Install on C channel using 3/8 inch hex bolts, flat and lock washers.
ix. Place pre-assembled center section between the two A frames centered on gear boxes both sides.

c. Gear Box Assembly. See DET-048,048A
   i. Locate Id plate at rear of gear box and position gear box so label is up at the top.
   ii. Tap the three top holes using a 3/8 inch coarse thread tap @ ½ inch down.
   iii. Locate and install three cut to length threaded rods use loctite at base.
   iv. Locate and place three ¾ inch backup locking collars, place one on each shaft.
   v. Locate and place ¾ inch bore star coupling (2) and key on each end shaft (end shafts opposing each other), do not torque at this time.
   vi. Ensure Lovejoy caupling is installed on the input side of gear box.

NOTE! Correct rotation of gear box is ascertained by turning input shaft clockwise and watching that the side gears rotate towards the rear, if not flip gear box over. Or, verify that ID tag is right side up, you can read the tag.

vii. Locate and install a ½ inch star coupling and key onto the right input shaft of the action jack gear box allowing 1/8 inch space between coupling and gear box face. Loctite and torque set screw.
viii. Position the nylatron sleeve coupling connector over the right action jack input coupling.
ix. Position 90 degree gear box right output shaft through large hole in mount plate. Install finger tight two 5/16 inch coarse bolts and nuts, and washers through top two mount holes on gear box.
x. Align gear box output coupling with nylatron sleeve allowing 1/8 inch side to side movement of sleeve on couplings.
xi. Tighten set screws on output shaft of gear box coupling and lock collar.
xii. Position center drive shaft right side to the gear box. Install finger tight two 5/16 inch bolts, washers through gear box top mount holes and support brackets of drive shaft assembly.
xiii. Using an inclinometer, set it to 4 ½ degrees and place on top of machined surface of gear box. Adjust gear box to center the bubble and tighten the right mount bolts.
xiv. Position and level center drive shaft to the gear box and left input shaft of the action jack.
xv. Install the left coupling over the key, drive shaft end and input shaft of left action jack input. Tighten set screws. Return to loctite after everything is functioning correctly.
xvi. Position, level and align right drive shaft star coupling to nylatron sleeve and left output shaft on gear box. Allow 1/8 inch free play beteen the two star couplings. Tighten all set screws.
xvii. Tighten left gear box mount screws now.

d. Lift Motor and main Drive Shaft Installation. See DET-043C,048

   i. Fabricate and friction fit key lock to fit the each (**LOVEJOY)** hub half key way.
   ii. Place the keys into the keyway of output shaft of motor and 7/8 inch input end of main drive shaft. Position keys to match the ends of the shafts.
   iii. Position one retaining ring and coupling seal over the motor shaft.
   iv. Heat motor half of coupling to 350 degrees on bearing heater.

WARNING Use gloves to protect hands from severe burns when handling hot metal couplings. The following step must be performed quickly and accurately or the coupling will not be able to be moved once cooled.

v. After couplings are heated using gloves, immediately position over key and motor shaft match ends of the shaft to face of coupling.
vi. Install the lift encoder over the lift drive shaft before installing the last star coupling.
vii. Repeat steps four and five for the main drive shaft end.
viii. Pre-lube the Sleeve and couplings with bearing grease.
ix. Slightly lube seal flanges.
x. Place sleeve over motor coupling, insert the seal far enough to allow the retaining ring groove be visible.
xi. Install the retaining ring in a spiral manner.
xii. Repeat steps 7-10 for main drive shaft side.
xiii. Position motor to rear of right A frame.
xiv. Locate 3/8 inch bolts (2) flat and lock washers, nuts.
xv. Feed bolt through bottom two extreme mount holes on motor frame, place three flat washers over each bolt to act as spacers.
xvi. Lift motor and position bolts through A frame mount holes, place tapered washer over bolt, lock washer and nut, finger tighten only. Release the lift brake, knob at rear CW till it locks.
xvii. Remove the coupling sleeve grease fitting bolt. (Center of Sleeve)
xviii. Insert a ¼ inch allen wrench till it bottoms out.
xix. Position lift encoder over drive shaft with locking collar facing gear box.
xx. Position main drive shaft near and in line with input shaft of gear box, align keyways and key, mate Lovejoy coupling onto the main drive shaft and input to gear box. Install seals and lock rings as before.
xxi. Position the long 3/8 inch bolt on end top mount plate hole, attach two 3/8 nuts over bolt, swing motor up and feed bolt through upper mount hole on A frame. Attach 3/8 lock washer and nut. Do not tighten now.
xxii. Measure distance from side of shaft to main base at both ends of the drive shaft, the distance must be equal. See DET-
xxiii. Adjust and then tighten the top motor mount bolt when distances are correct.
xxiv. Remove ¼ allen wrench from coupling sleeve and reinsert the grease plug. This procedure assures that the proper distance is set between main and motor shafts so that they do not bottom out during operations.
xxv. When all is aligned, go over the entire network and loctite each screw/bolt in turn.
xxvi. Position the lift encoder @ 3.5-4.0 inches from the flex motor coupling and tighten the locking collar.
xxvii. Ensure that the brake release knob at the end of the lift motor is OFF CCW and moves freely.

CHAPTER 4 –COMPUTER SYSTEM / INTERFACE

4-1 Introduction

This section is designed to provide you with the necessary settings pages to troubleshoot any of our simulators. The setup follows the presentation order of the system manager program. Only the pages that can be altered are listed in this appendix. It has been noted at several locations that local computer "experts" have changed settings in order to enhance their riding pleasure only to have unbalanced the system causing failures. The readings displayed within these pages should represent a guideline for your settings only. Always refer to your machines particular original setting records to return your system to an operating condition. **Never change a setting without authorization from the MaxFlight Technical Support Division.**

4-2 Hitachi Projector Settings

4-2A Hitachi Projector Settings for Model CP-275

See the manual in PDF format on MaxFlights Manual CD-Rom.

To obtain the best possible picture from these new style projectors the following settings are the ones we at the factory set into the projector electronics.

1. Turn computer ON, have video signal present at the projector.
2. Turn cockpit power ON
3. Turn projector lamp power ON, using remote.
4. When lamp is bright and signal present using the remote select and set the following parameters;
    a. Select Menu ----all items are default settings except ASPECT, this must be set to the second icon in or 16:9
    b. NOTE! As the projector ages, some or all items may require adjustments to bring the picture back into line. See the manual for item functions.

5. Input Menu –
    a. Select RGB
    b. Auto select auto adjust for RGB input

6. Image Menu
    a. Keystone to "0"
    b. Mirror - H Invert
    c. Start Up – Turn ON
7. Options Menu
    a. Volume to "0"
    b. Menu Color to BLUE
    c. Language to Local desire, default is English
    d. Timer to 15 Min
    e. Auto OFF to select STOP, no standby mode
    f. Sync on G –turn OFF, sync on G Invalid

4-3 Layout

This section focuses on the settings pages required to trouble shoot the system. If a MaxFlight technician has not trained you, do not change any of the settings. The order of presentation are as follows:

Operator Panel Game Start
Operator Panel (R/H)

Platform Motion Control Panel
Sample Motion Alert Window
New Player Window
Select Game Window
Select Level Window
Configuration Status Window
Devices
Devices2
Flight Stick/Throttle (User Joystick 0) Window
Joystick 0 initial setup
User Joystick 0 Axes
User Joystick 0 Sliders
Address (System Properties)
EDS
Path (Game logs and alert Logs)
IO Drivers
Direct Sound Properties
Lock
Voodoo SST Video Properties
Voodoo Properties 1
Voodoo Properties 2

4-4 Troubleshooting

Most problems are not related to the computer settings, they are usually caused by problems such as loose connections, broken wires or malfunctioning components. The settings pages can assist a "factory trained" technician in troubleshooting hardware related problems. The key to isolating a malfunction is to check with the operators as to the operating condition of the machine over the past few days.

OPERATOR PANEL

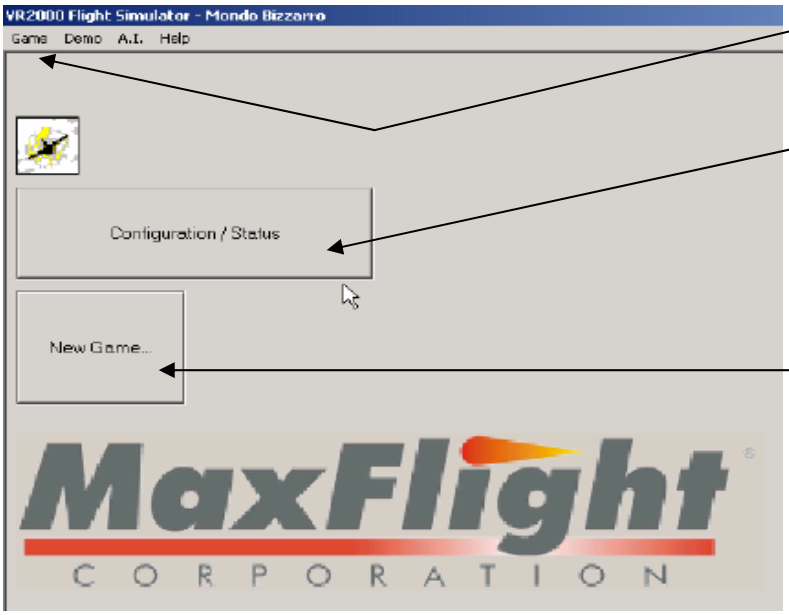

To initiate the game. Click GAME then START.

To open the settings pages you must click on Configuration icon, enter your password and then you will see settings windows.

To select a new game click here

Operators Panel (RH)

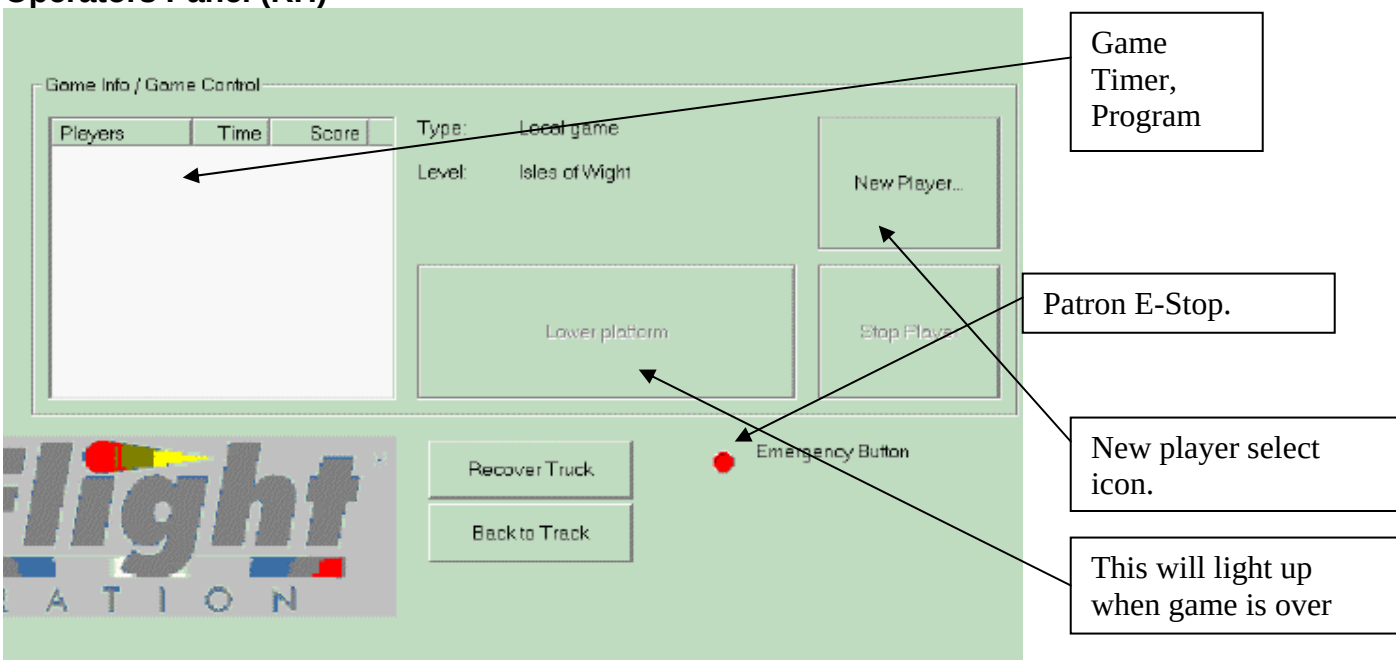

Platform Motion Lift Control Panel

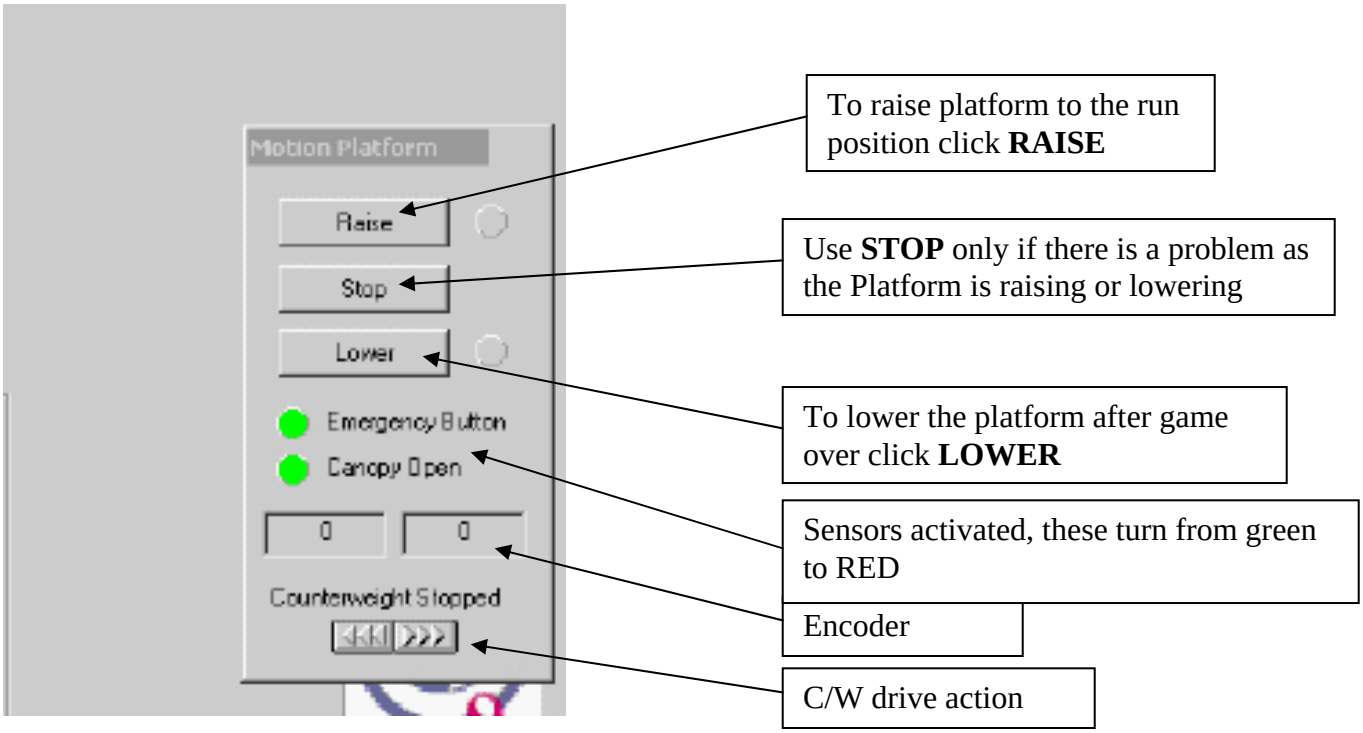

Alert Window Sample

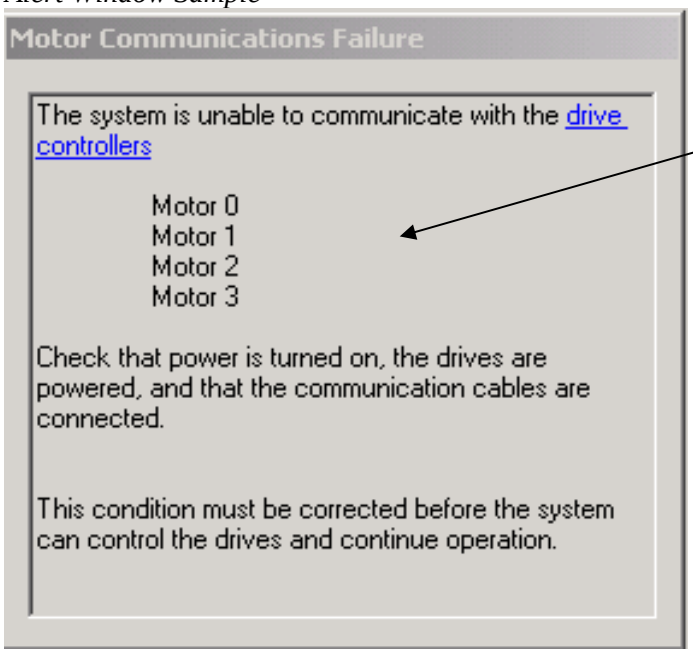

Sample failure alert window. In this case the power to the inverters has not been turned on. **Information will differ to the failure encountered.**

New Player Window

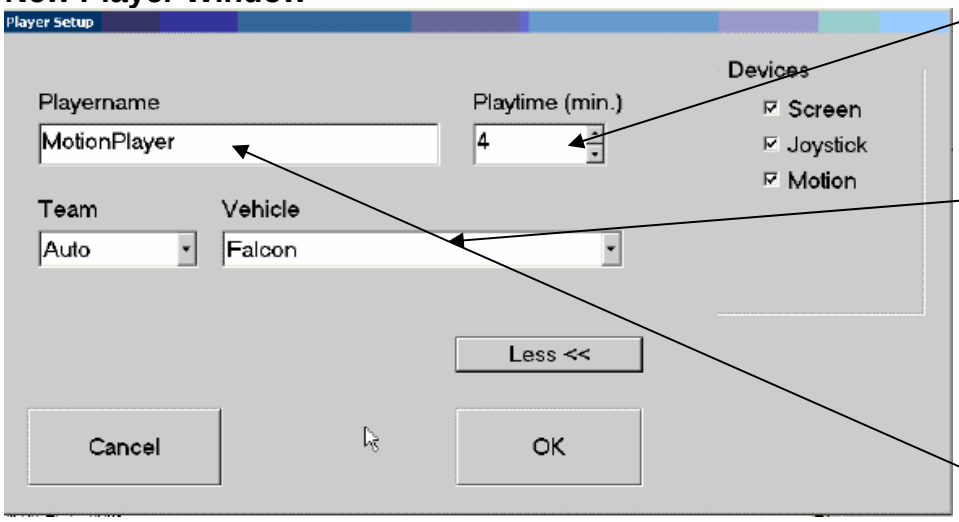

Default time, can be changed by clicking the up/dwn arrows.

Team color can be changed if networked with another unit to differentiate crews.

Make the selection as to what the patron desires or your default.

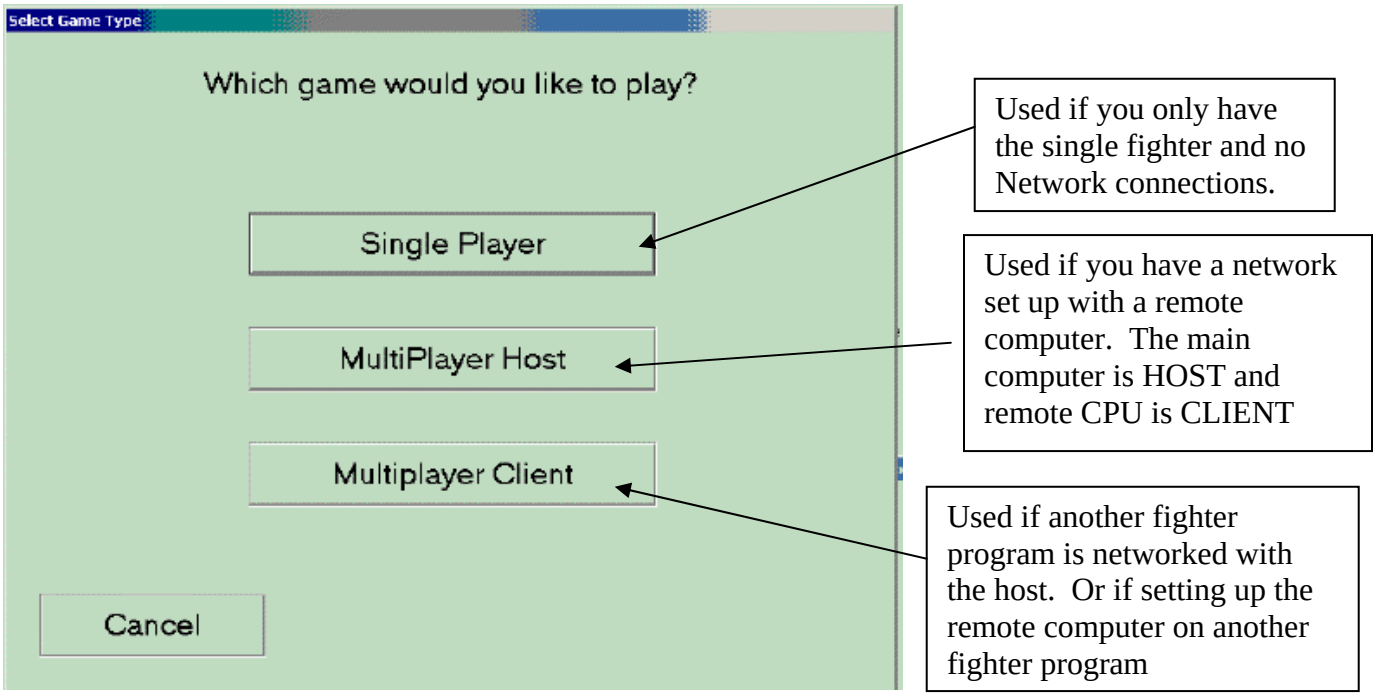

Mondo Bizzaro games

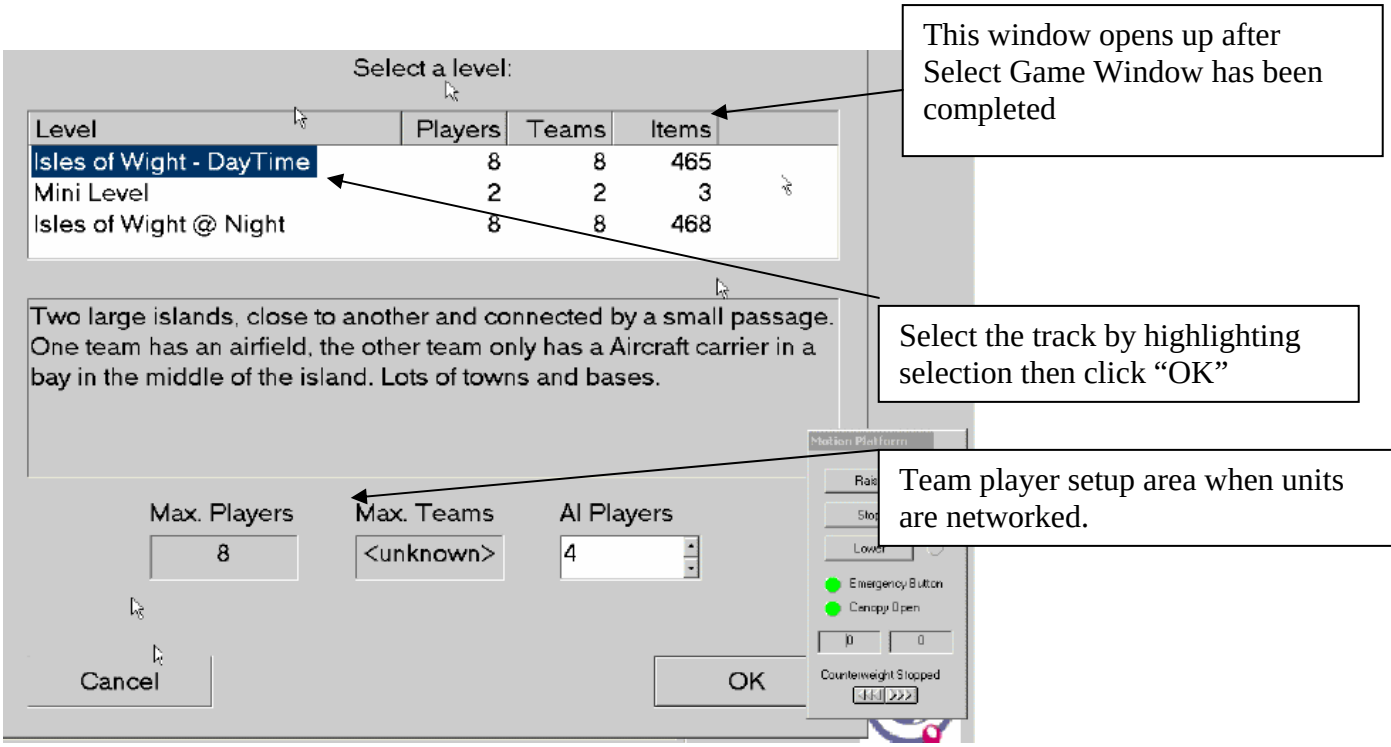

Double click to select

Status Window

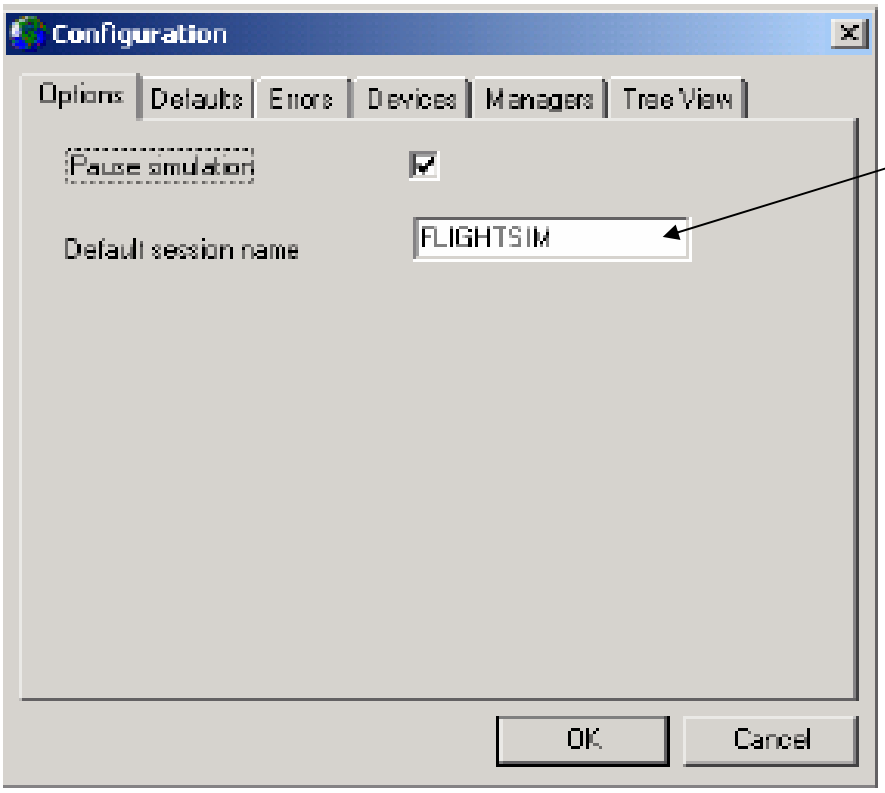

Will state either Flight Sim or Standup

DEVICES

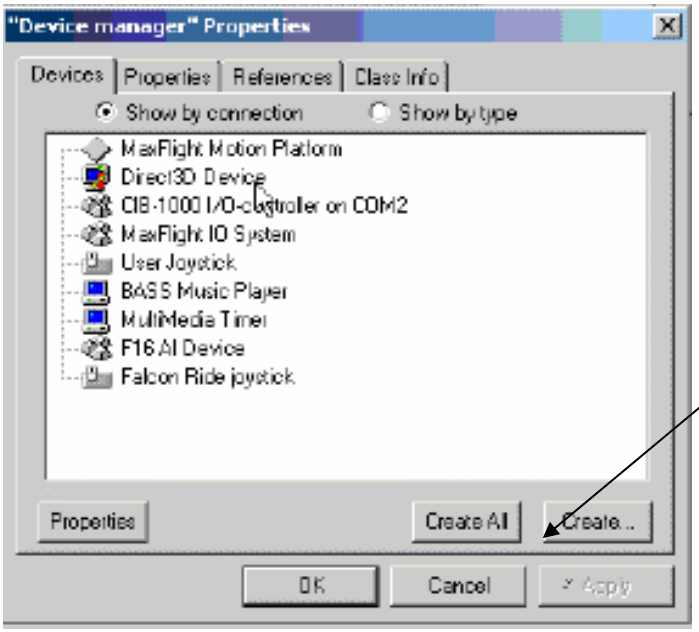

To display all the devices used in the program, click on show all and will open up like “Device 2” below.

DEVICES 2

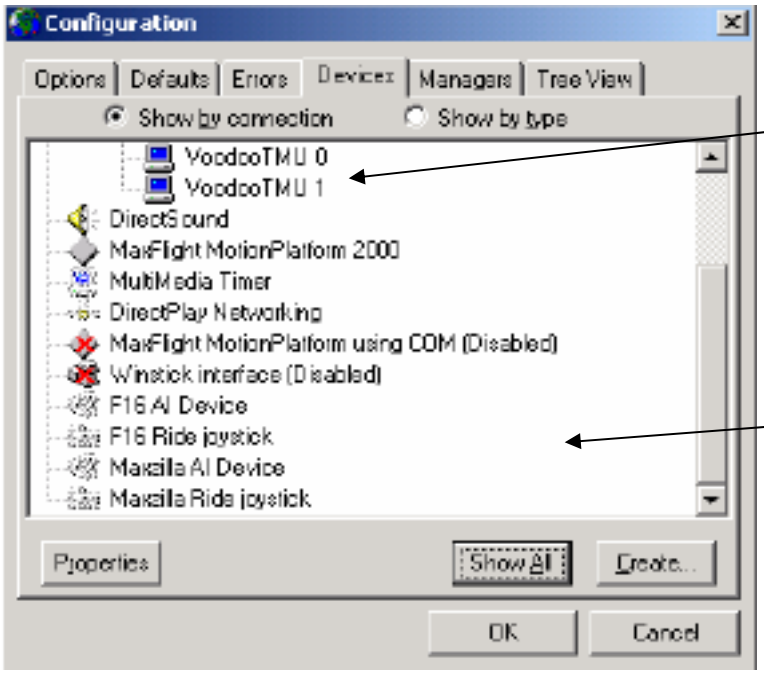

By double clicking on any device it will open that devices property pages. Make no changes unless you are familiar with procedures and have the correct values.

Rest of Configuration window that comes up after clicking on

USER JOYSTICK 0

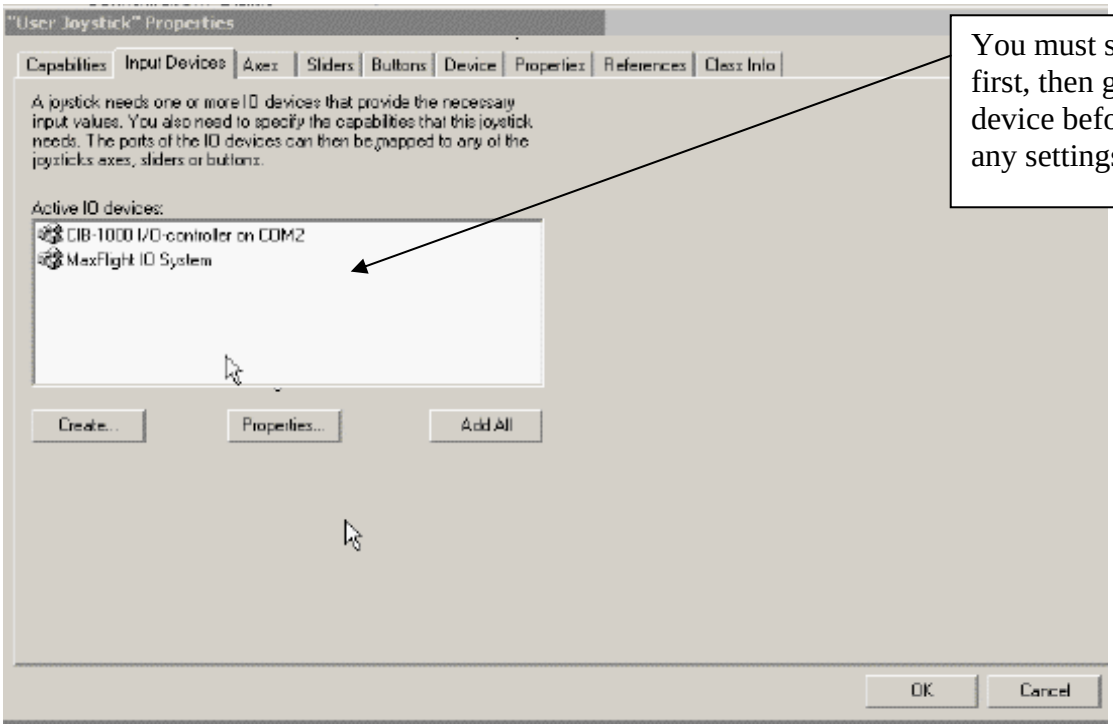

You must select the controller first, then go and start the device before you go to make any settings changes initially.

User Joystick Initial Setup/Calibration

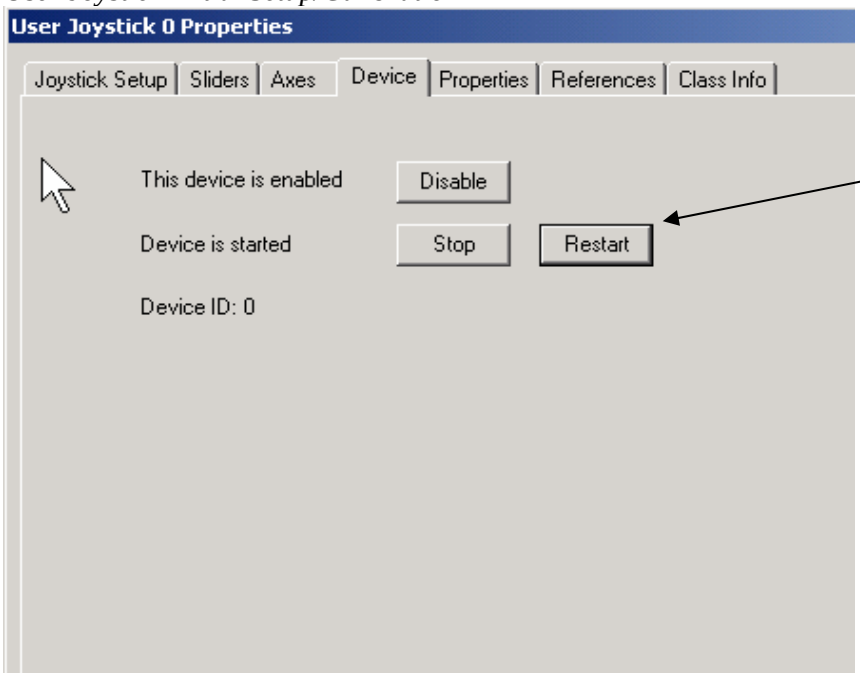

NOTE: Before the joysticks can be calibrated you must start the DEVICE and

USER JOYSTICK 0 (AXES)

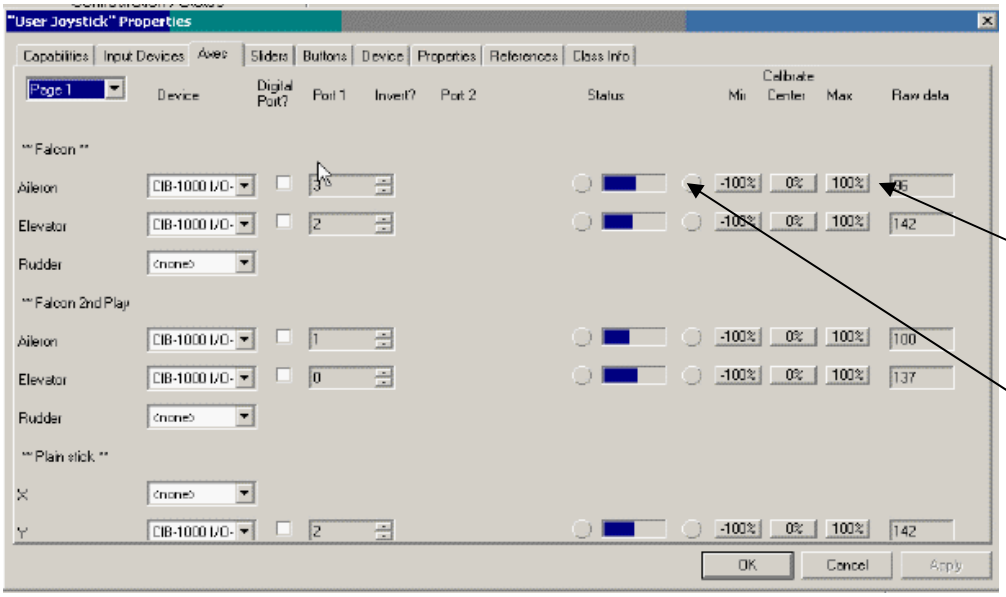

Calibration buttons

Analog output to the CIB-USB/ HAAP controller

USER JOYSTICK 0 (SLIDERS)

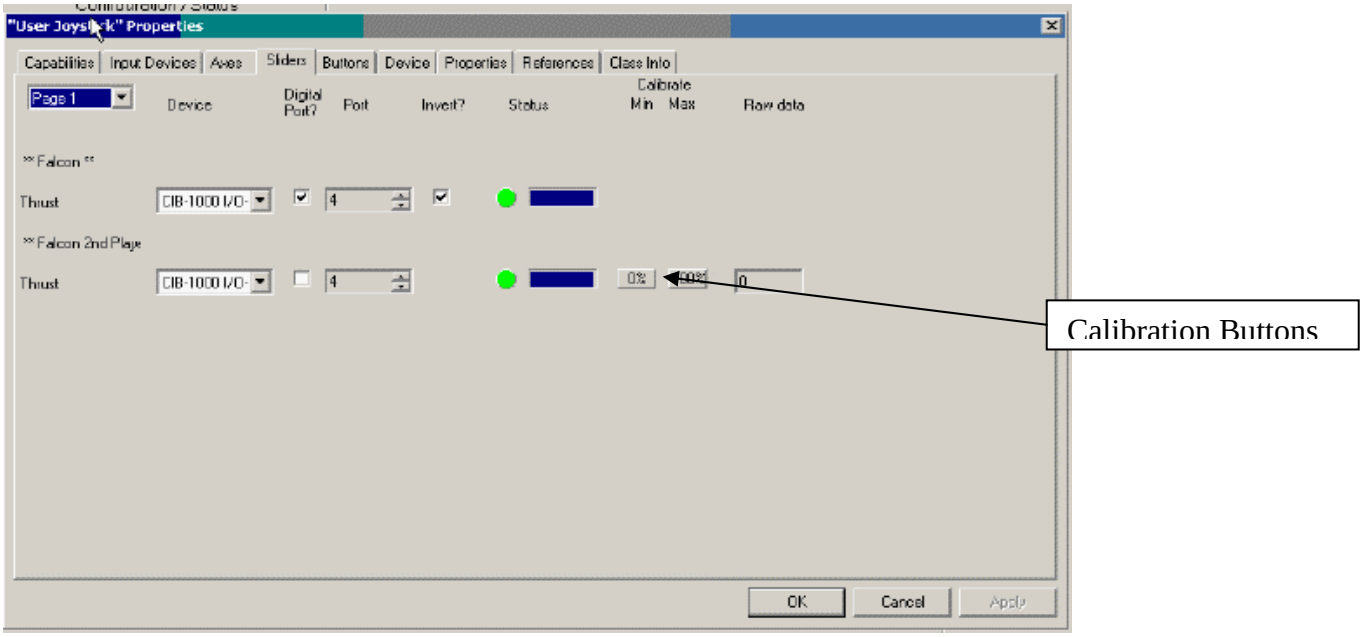

Joystick Buttons (1)

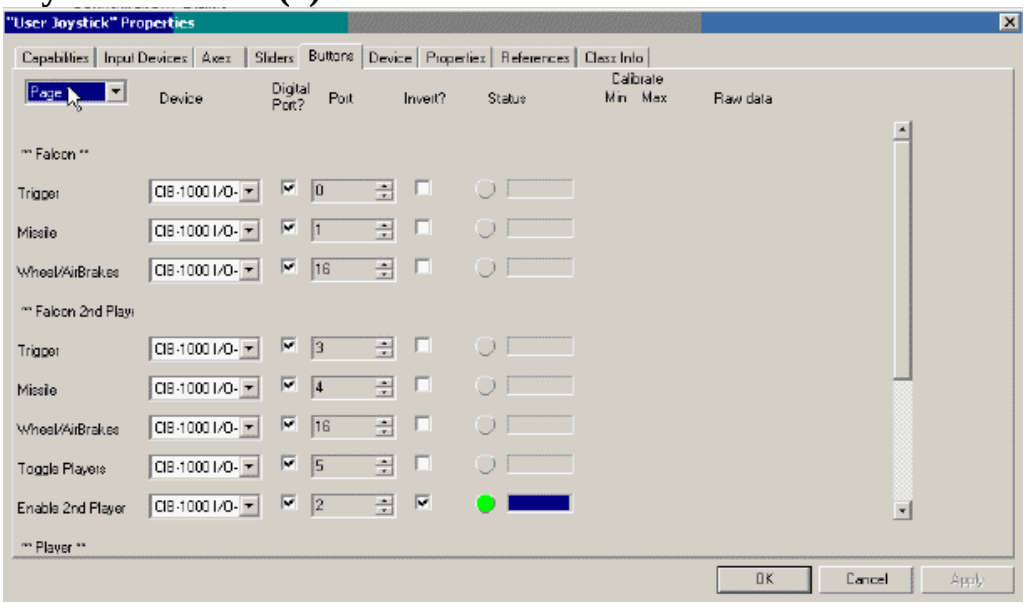

Joystick Buttons (2)

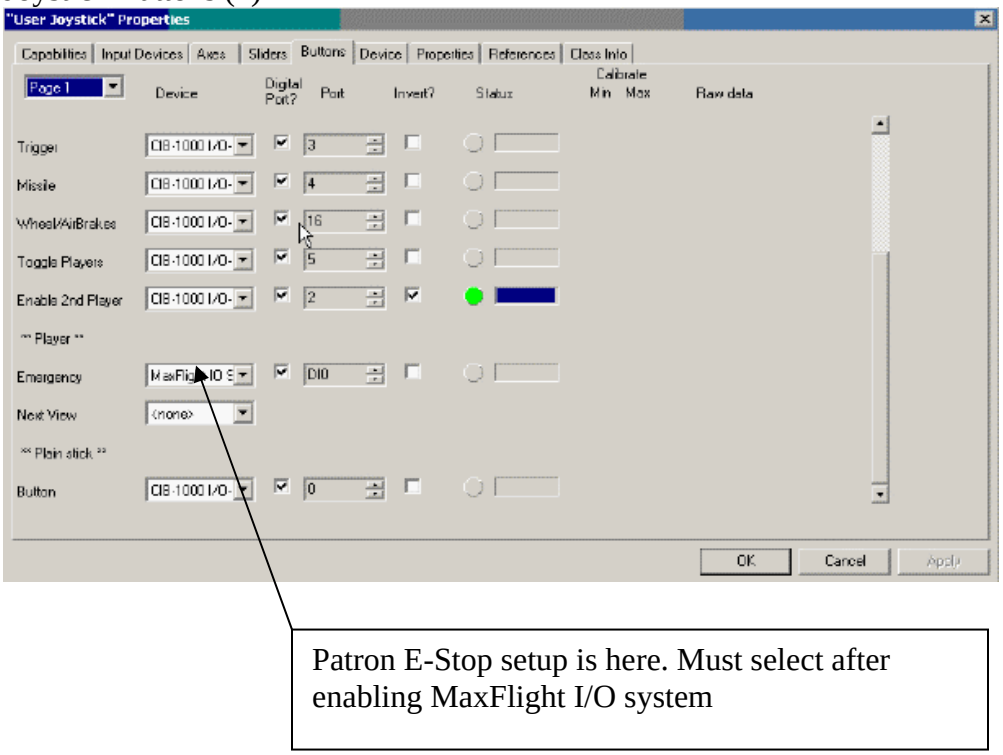

Patron E-Stop setup is here. Must select after enabling MaxFlight I/O system

Joystick Capabilities

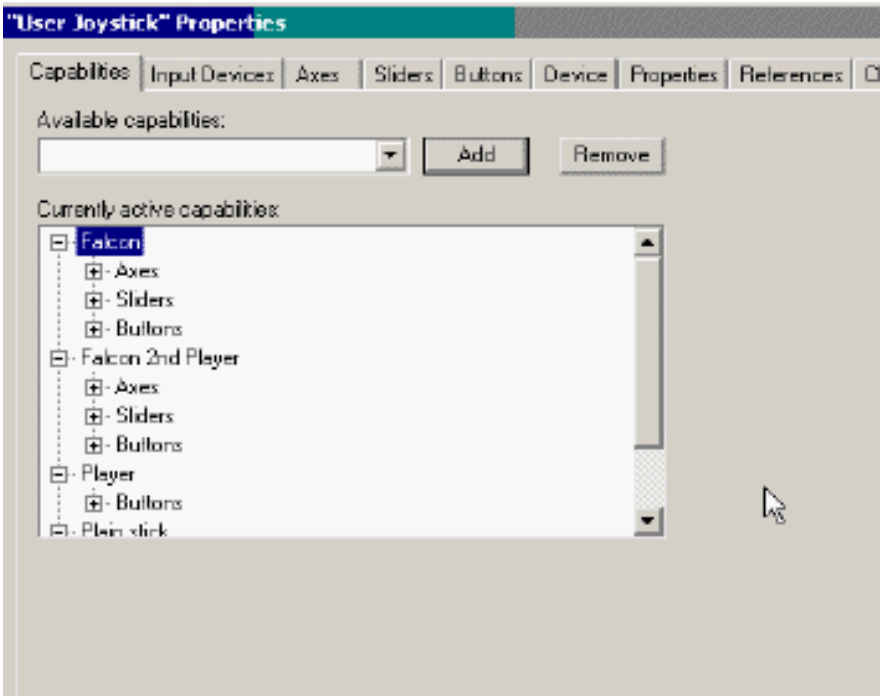

Address

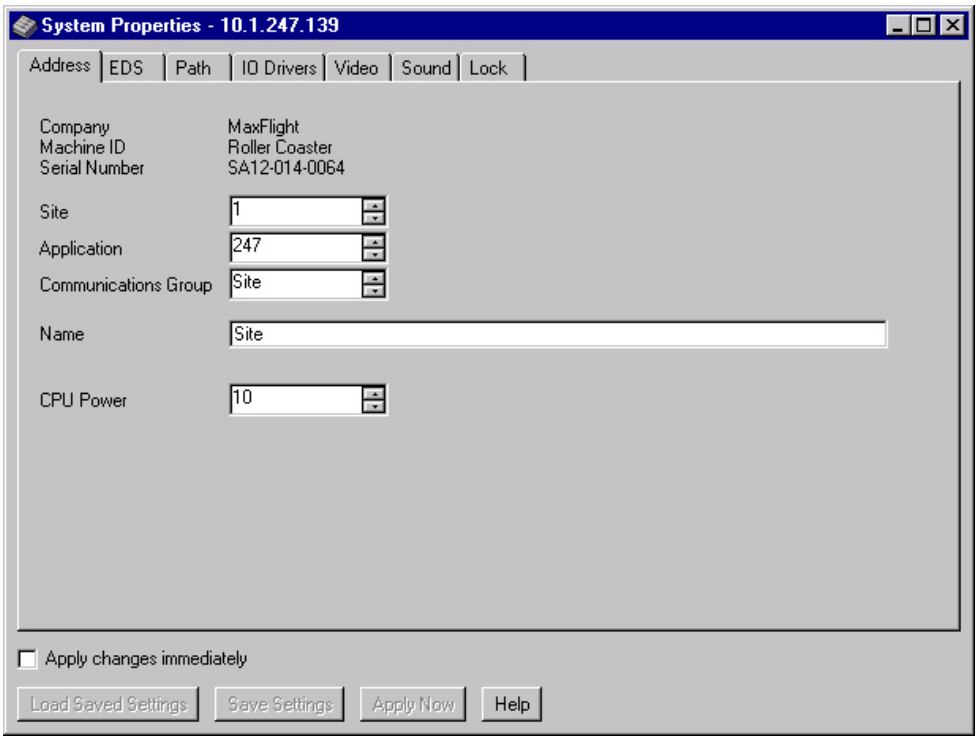
System Properties - 10.1.247.139
Address
EDS
Path
IO Drivers
Video
Sound
Lock
Company
MaxFlight
Machine ID
Roller Coaster
Serial Number
SA12-014-0064
Site
1
Application
247
Communications Group
Site
Name
Site
CPU Power
10
Apply changes immediately
Load Saved Settings
Save Settings
Apply Now
Help

EDS

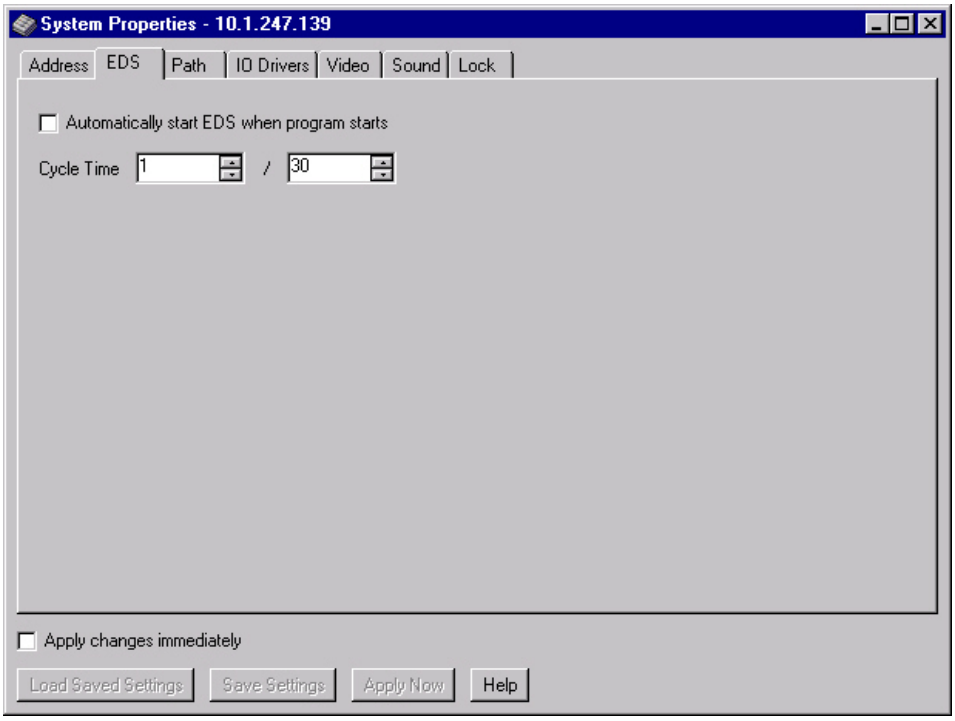
System Properties - 10.1.247.139
Address
EDS
Path
IO Drivers
Video
Sound
Lock
Automatically start EDS when program starts
Cycle Time
1
/
30
Apply changes immediately
Load Saved Settings
Save Settings
Apply Now
Help

Path

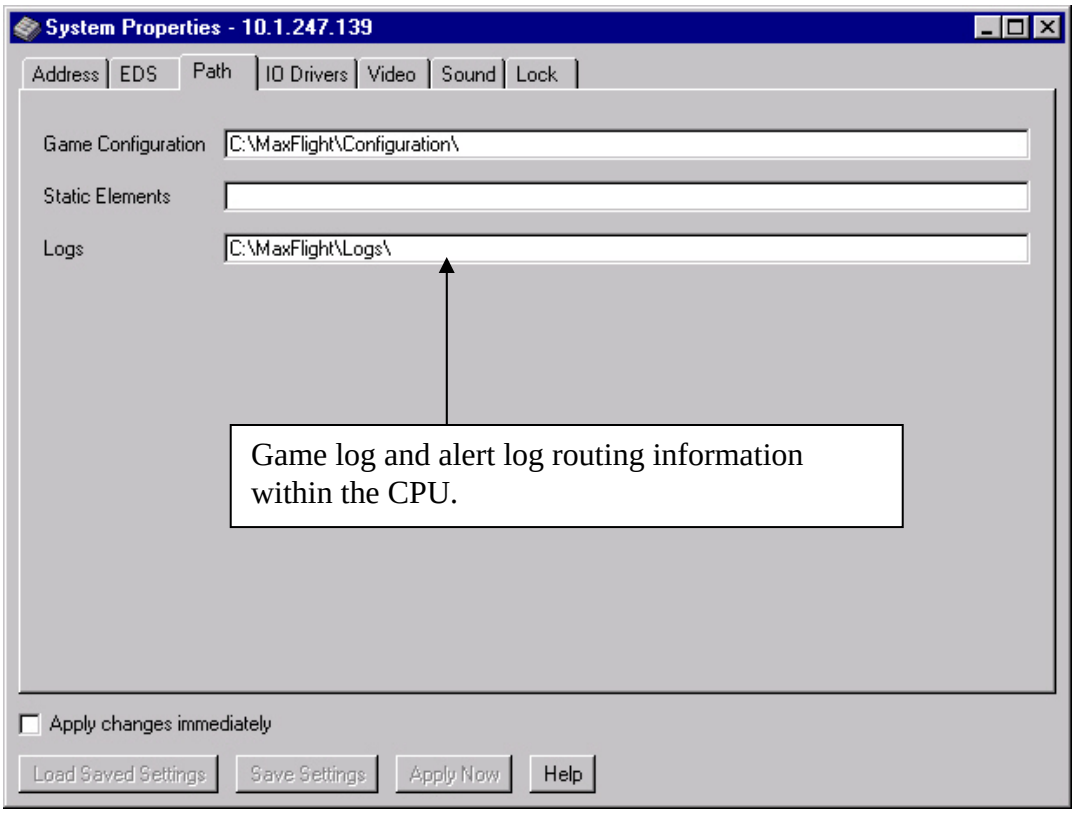

IO Drivers

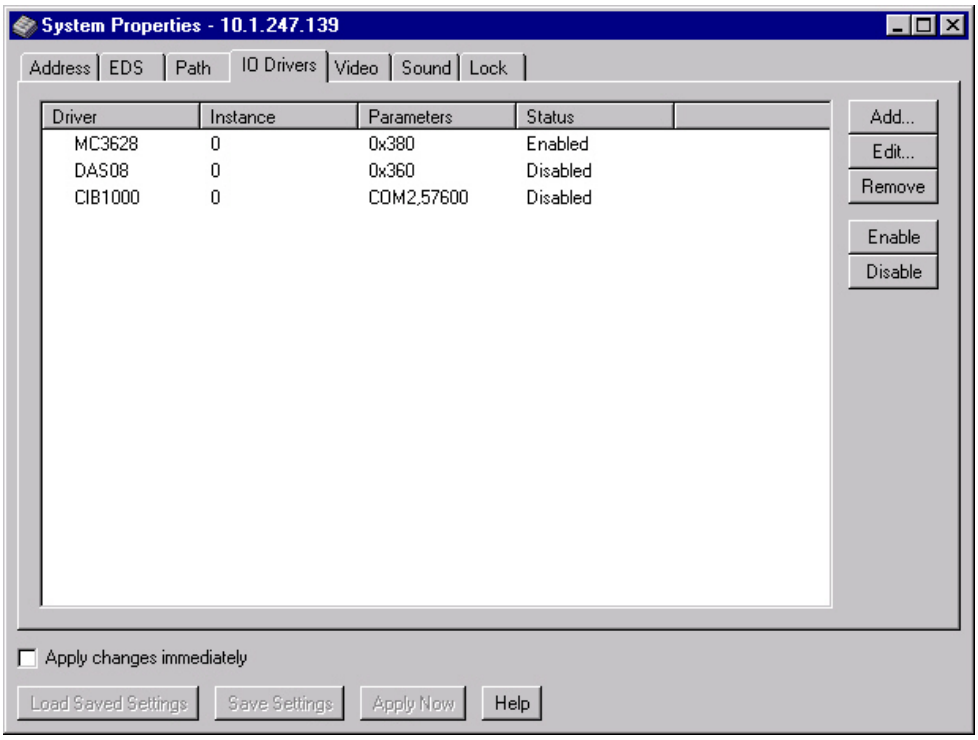

Direct Sound Properties

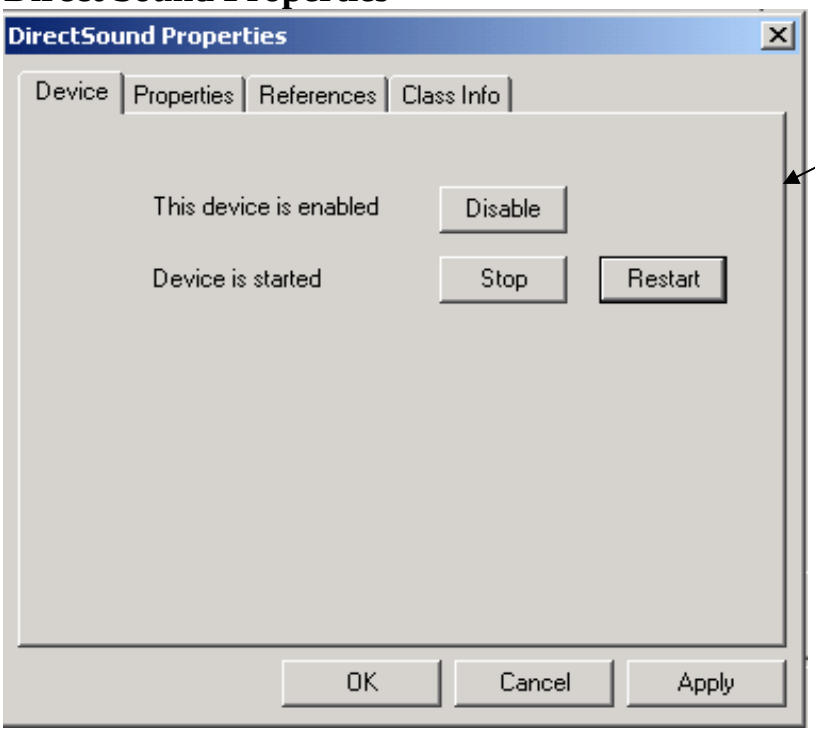

This panel is opened by double clicking on Direct Sound in the device window

Lock

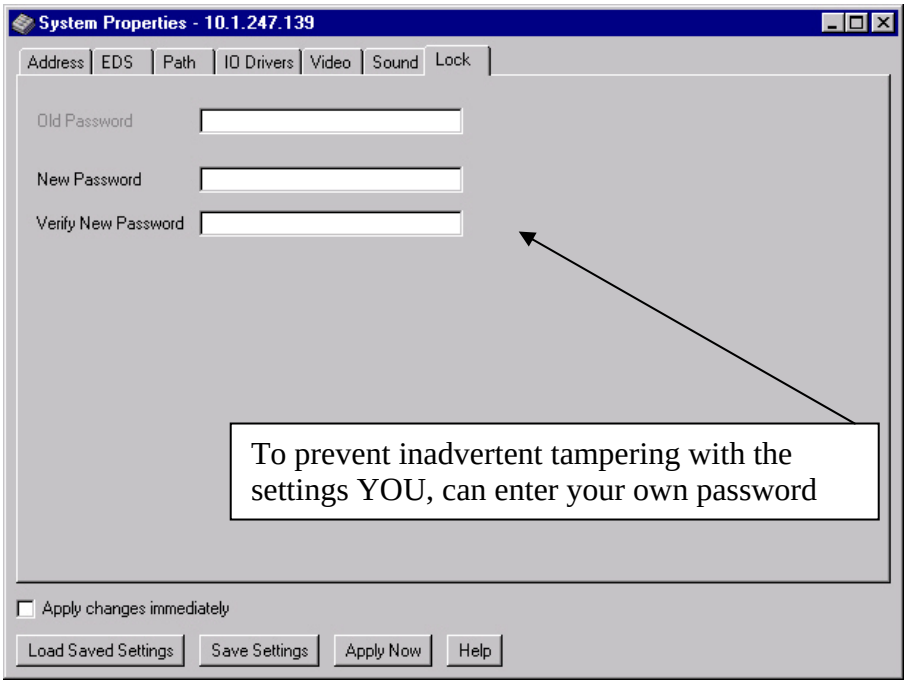

To prevent inadvertent tampering with the settings YOU, can enter your own password

Voodoo Video Properties

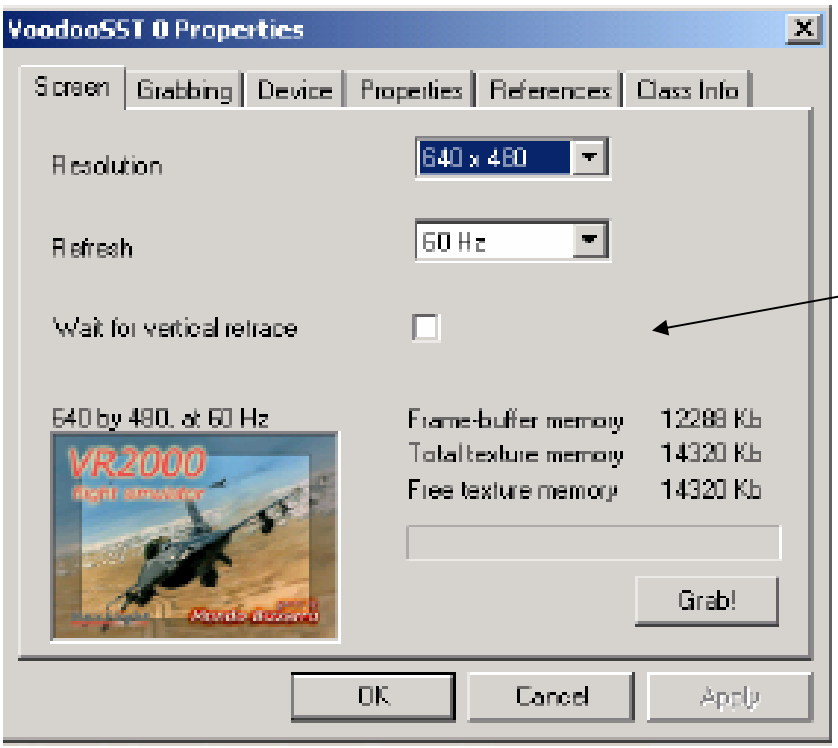

This window varies depending on the video card installed in the on-board computer

Voodoo SST Properties

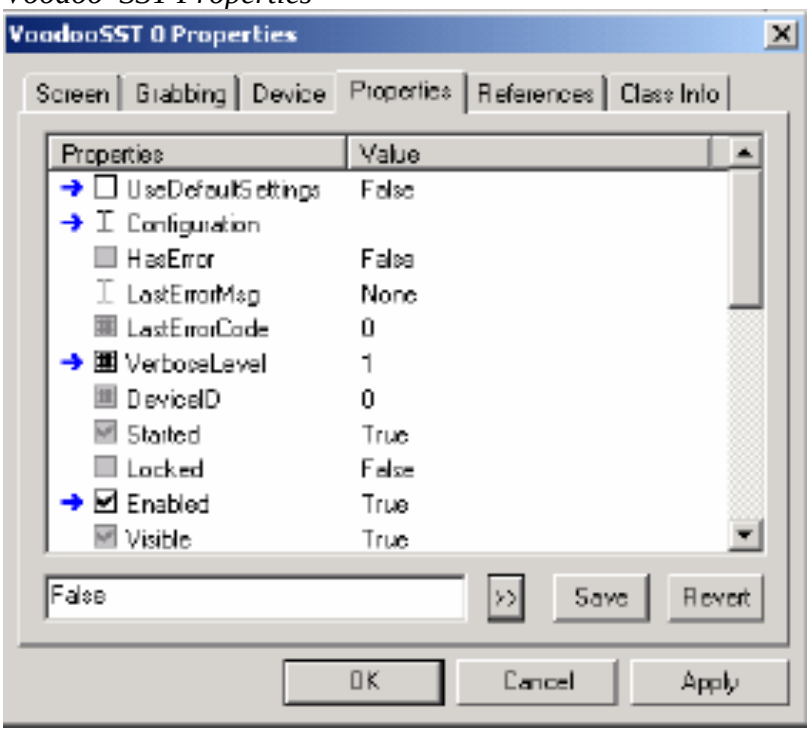

Voodoo SST Properties 2

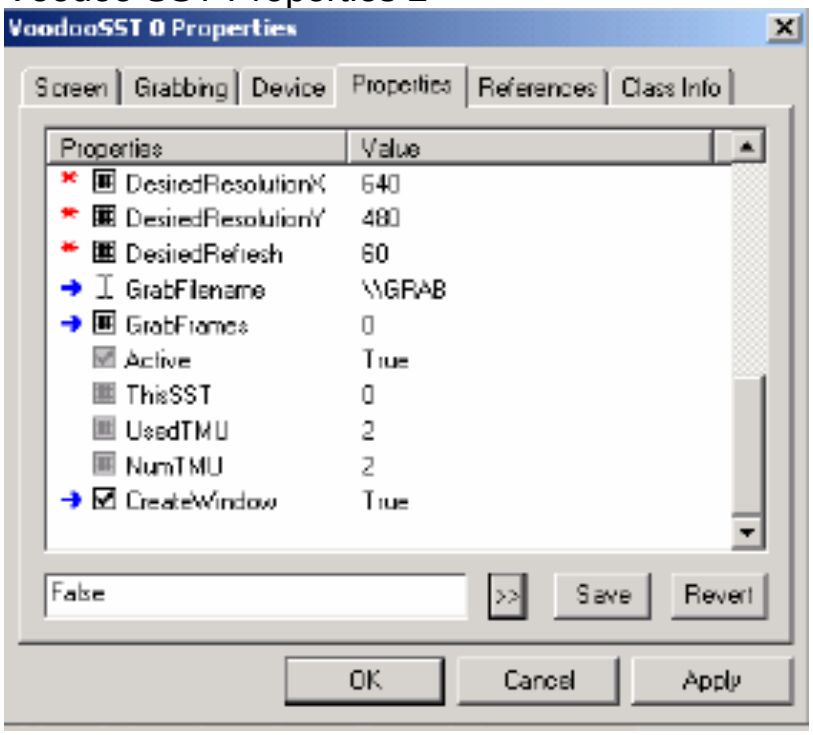

New Motion Test Client window

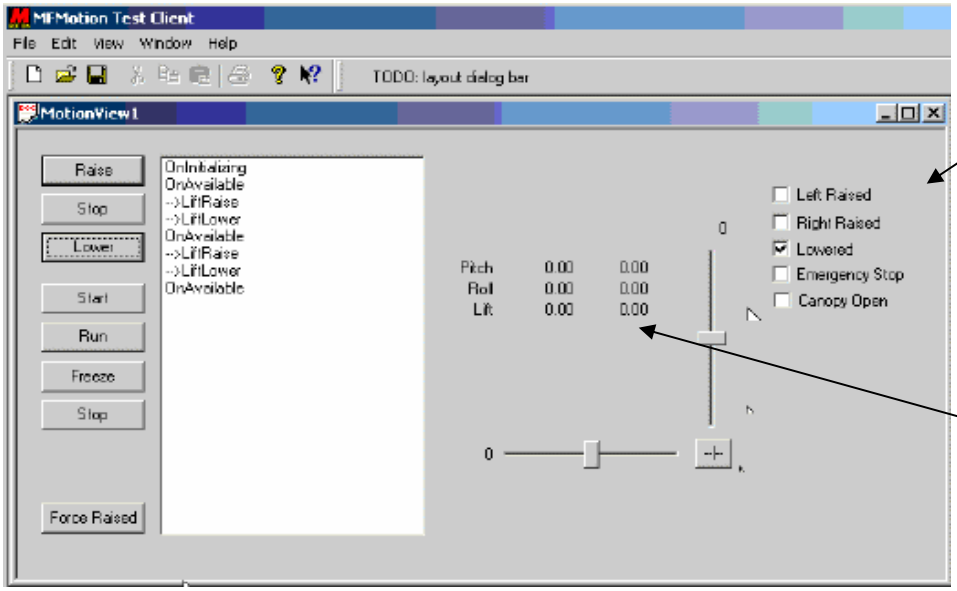

Allows testing of all the sensors on the motion platform

Allows the testing and monitoring of all encoders on the motion platform.

This Window will show you the latest or current software loaded

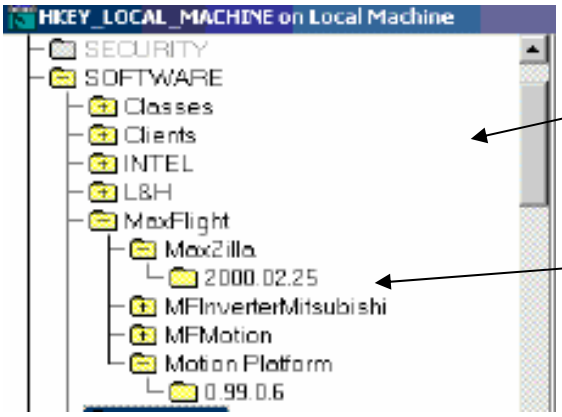

Found by going regedit , HKEY Local Machine, Software, Maxflight, Flight Sim

Instead of Maxzilla look for Flight Sim

Software legend

Regedit 32 Window

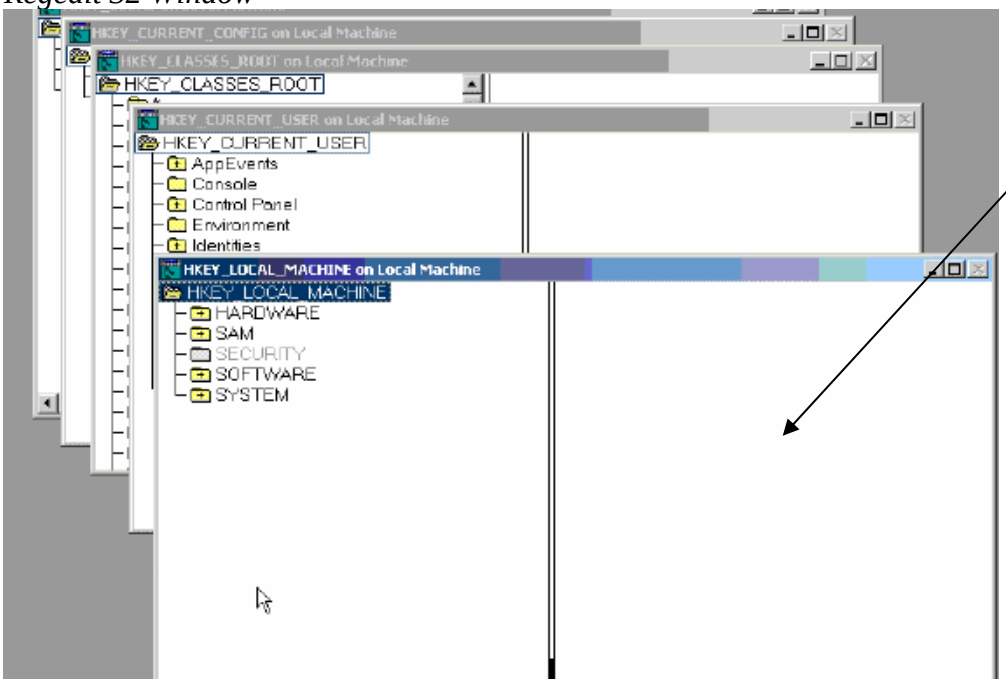

Start, Run, select Regedit32, enter

Hkey Local Machine Window

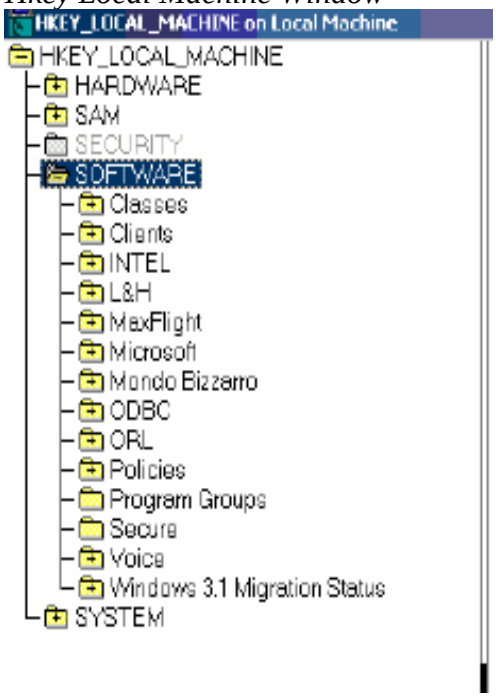

Lift Motion Editor Settings

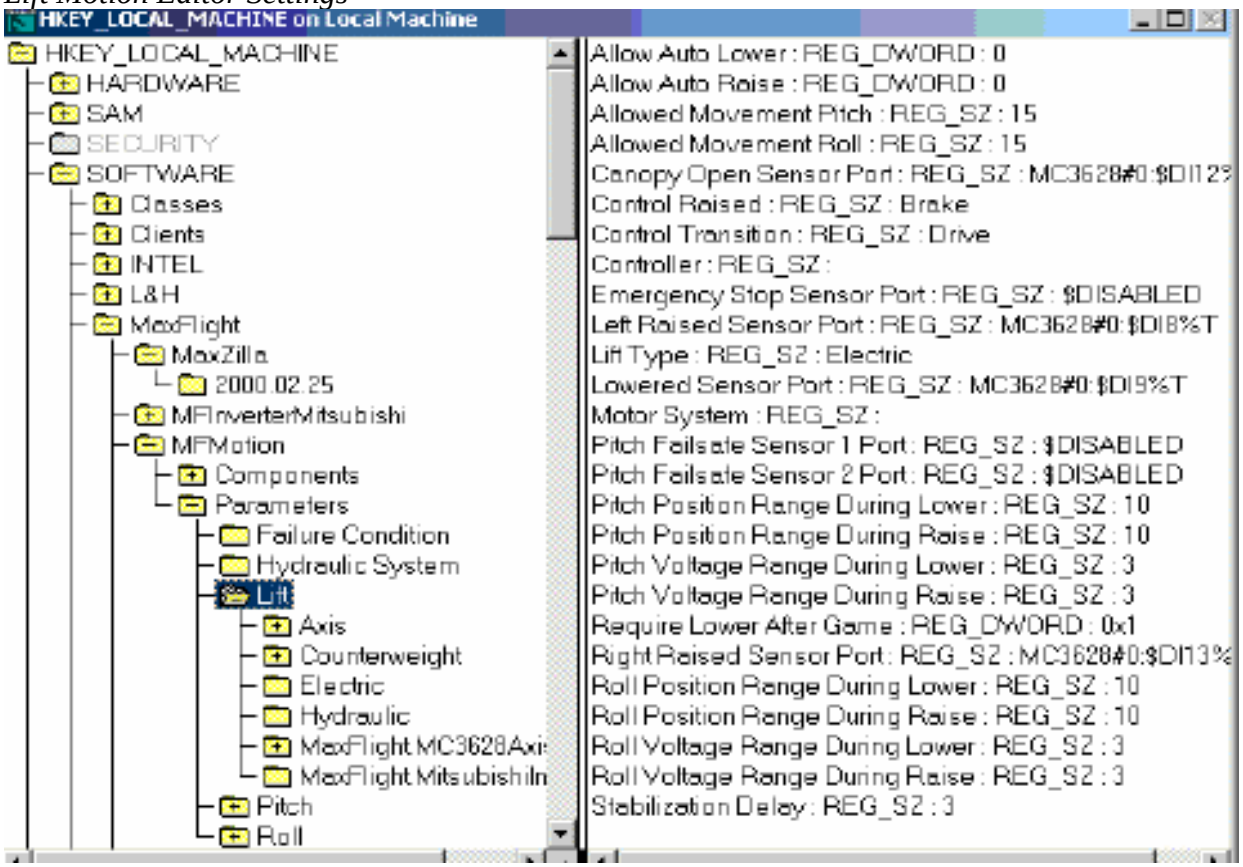

Counterweight Motion Editor

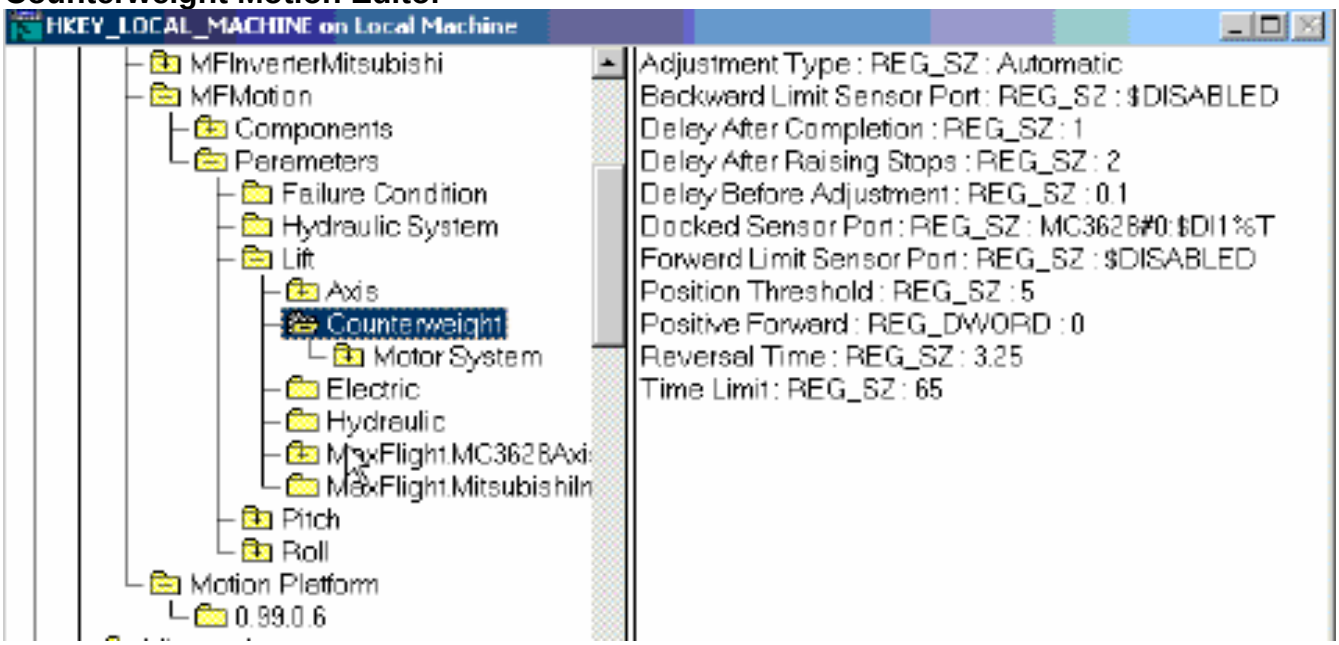

Counterweight Motion Cont.

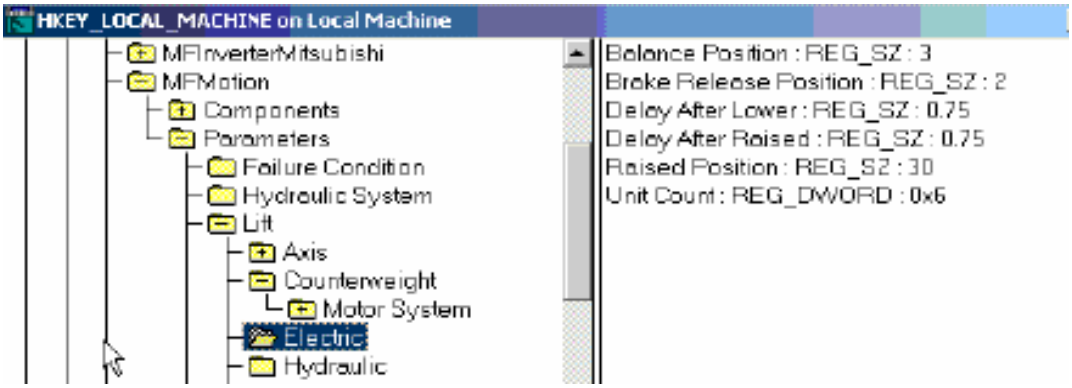

Pitch Motion Editor

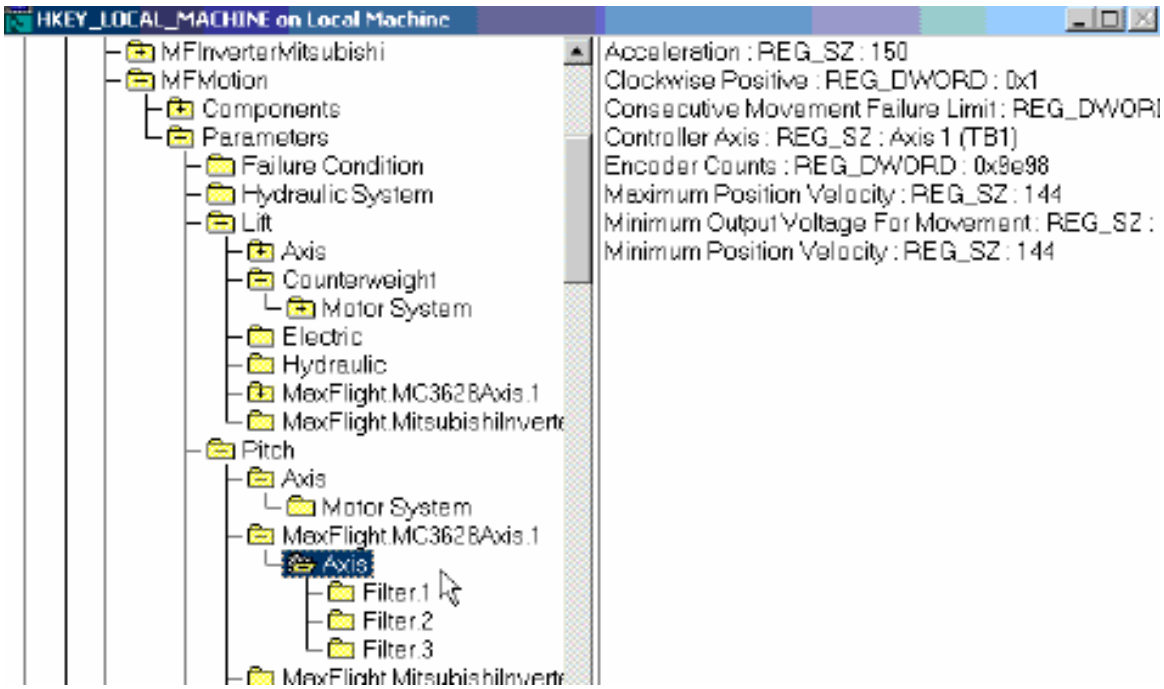

Pitch Motion Filter 1 Editor

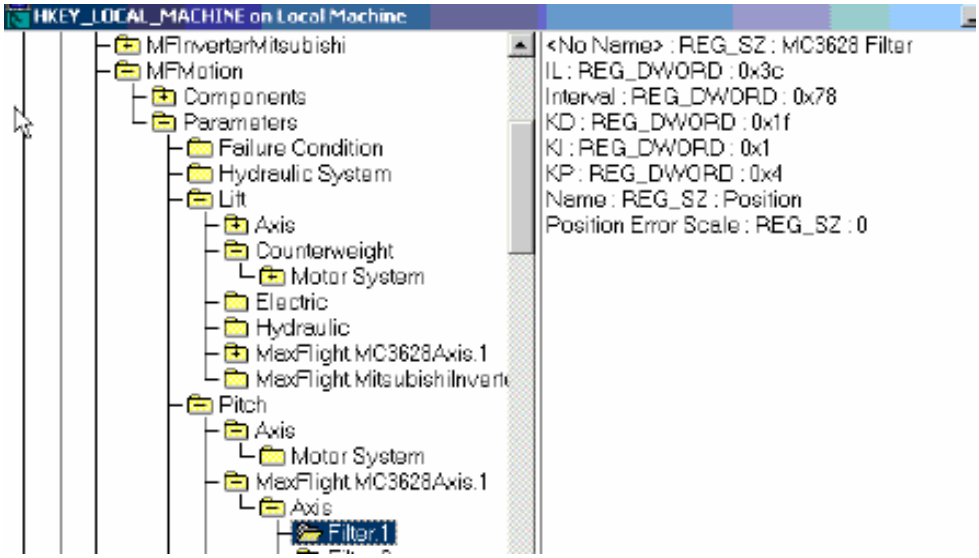

Pitch Motion Filter 2 Editor

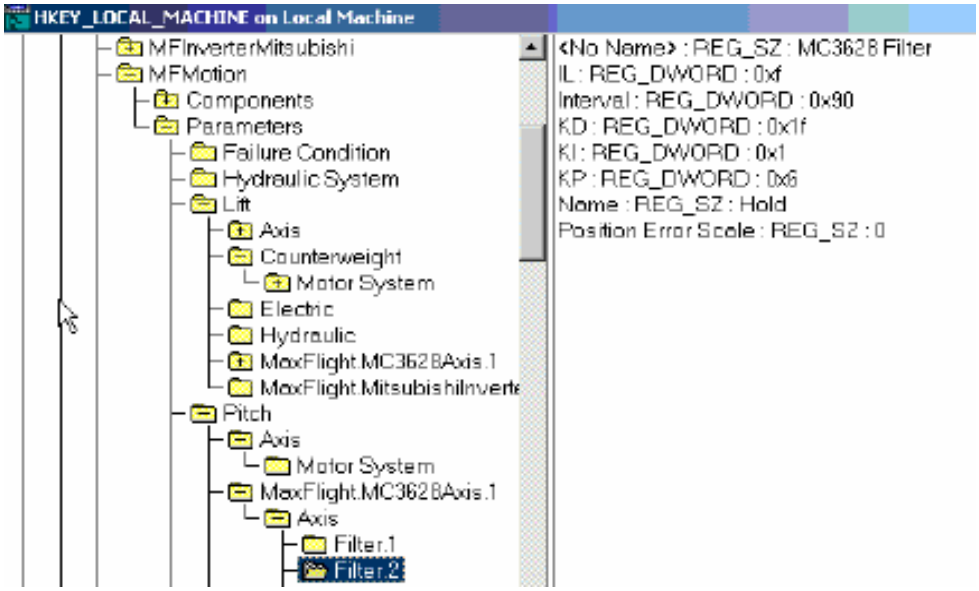

Pitch Motion Filter 3 Editor

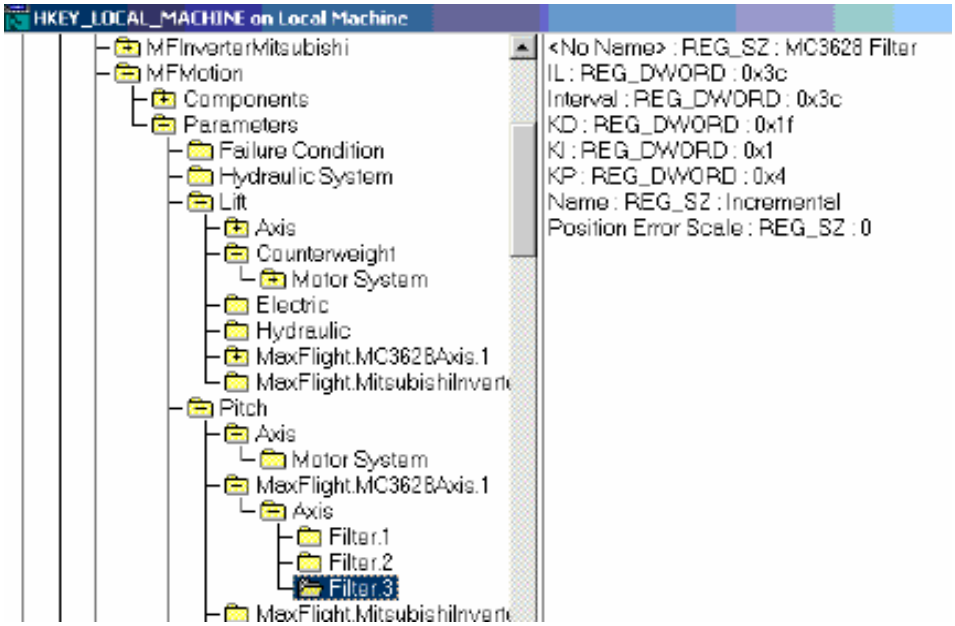

Roll Axes Motion Editor

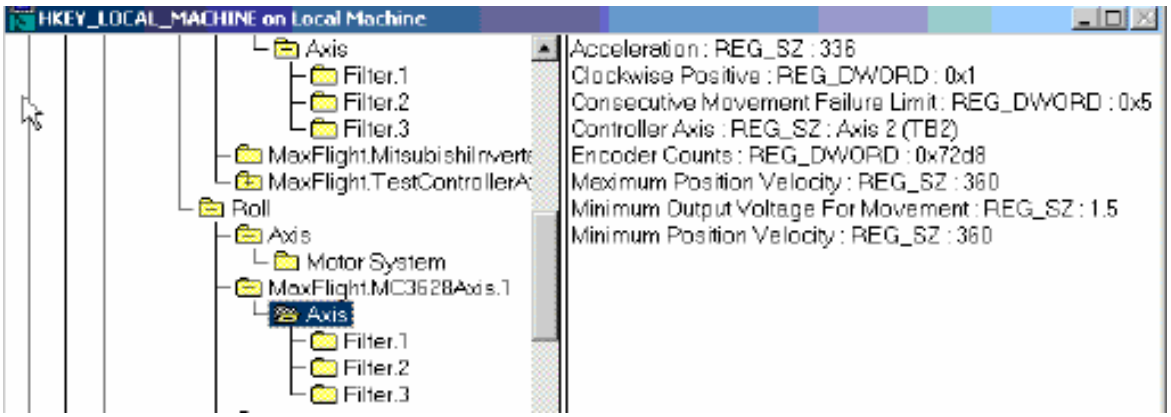

Roll Motion Filter 1 Editor

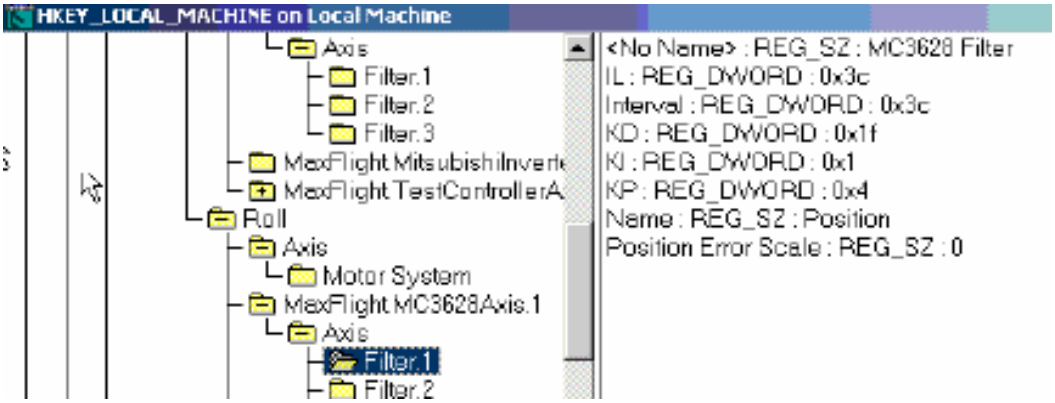

Roll Motion Filter 2 Editor

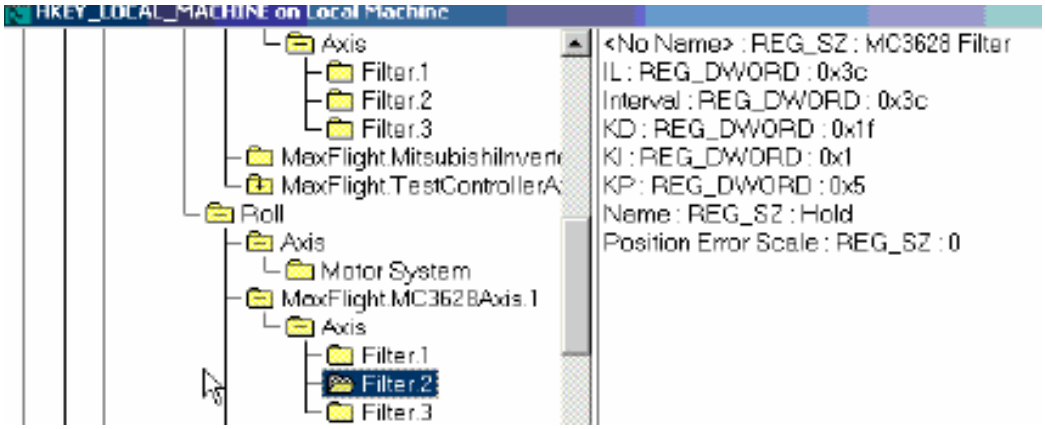

Roll Motion Filter 3 Editor

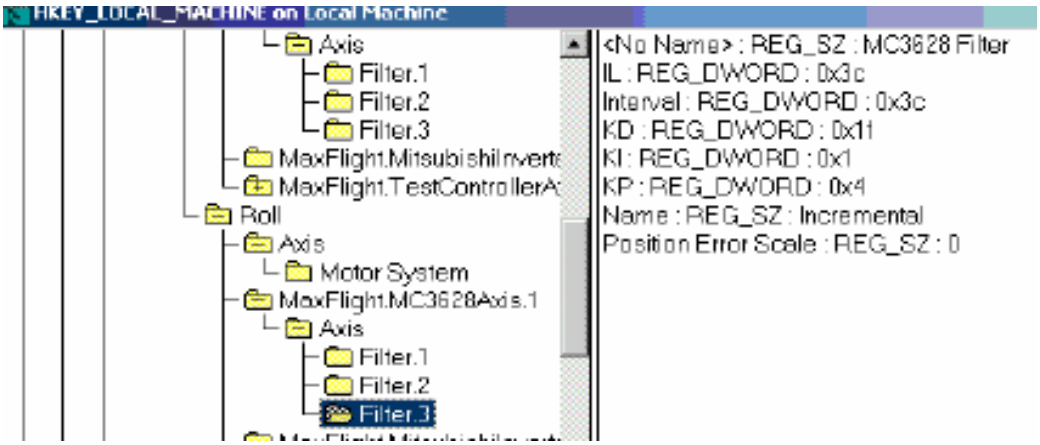

CHAPTER 5 – MAINTENANCE AND TROUBLE SHOOTING

5-1 Required Daily Pre- Opening Inspections and Maintenance Checks

Listed below are several, but not all areas and items that need inspection to ensure proper ride operation. Ensure the operators complete the daily inspections in accordance with the inspection checklist at the end of the operators' manual.

5-1A Emergency Stop Switch

This switch turns off electricity supplied to the Electrical Power Box.

5-1B Cockpit Assembly

Verify that the cockpit is clean and secure. Inspect the seats and restraint harnesses for operability. Inspect the speaker system mountings and wire connections. Inspect the latch systems to insure that they are working properly.

5-1C Canopy Assembly

Inspect the canopy mounting hinges and verify that the mounting screws are tight. Inspect the screen for cleanliness and verify that it is secured to the framing. Inspect the projector for mounting stability, lamp operation and that the lens is clean. Inspect the gas lifting ram sub-assemblies for signs of fatigue and the mounting systems for tightness. Make sure the spring safety clips are installed properly.

5-1D Tail Boom Cover

Inspect the Tail Boom Cover for any wear or damage. Verify that the center weldment cover plates are in place. Verify that the securing screws are tight lower aft bottom.

5-1E Loading Platform and Tail Boom Support Stand

Ensure that the Loading Platform (stairway) has not moved from its designated position. Make sure that the Tail Boom Support Stand has also not moved away from its position.

NOTE: If the tail boom support stand is not supporting the tail boom when the platform is lowered, the unit will not operate properly in the balancing phase.

5-1F Torque Arm Assemblies

Inspect the torque arm retaining bolt for tightness and wire locks. Verify that the retaining rings are secured to the torque arms.

5-1G Panel Fasteners
Ensure that the plastic fasteners are in place and are securing the side ABS panels.

5-1H Electrical Power Box
Check for loose power connections, cooling system and unusual vibration and noise.

5-1I Mitsubishi/Lenze Inverters
- Check the following:
  1) Inverter operation fault
  2) Cooling system fault
  3) Unusual vibration and noise
  4) Unusual overheating and discoloration

- If you suspect there is a voltage supply problem with the 480-volt 3-phase power, check the inverter input voltages using a multi-meter (DVOM) to insure that proper voltages are present.

5-2 Weekly Maintenance and Lubrication

5-2A LUBE REQUIREMENTS FOR ELECTRIC MACHINES

NOTE! Numbers Referenced in drawing.

1. LIFT JACKS. Use synthetic motor oil. Apply with lint free cloth. (Tee-shirt type material). Clean shafts with unit in raised position and then lightly coat shafts with oil dampened cloth. SUGGESTION. Use a coffee can with lid and keep cloth in closed container for reuse. This should be done every 200 rides or minimum once per week.

2. TORQUE ARM GUIDE RAILS. Lube with white lithium grease once every 200 rides or minimum once per week. Clean off old grease and lightly re-coat surface. Do not allow old grease to accumulate.

3. PITCH SHAFT BEARING BLOCK GUIDE RAILS. Same as #2 above.

4. PITCH SHAFT BEARINGS .Use oil can with synthetic motor oil. Loosen pitch inner locking collars and move inwards to center about (1) one inch. Apply ten drops or equivalent to topside of bearing, wipe off excess. Put locking collar back into position and snug down set screws. Also apply 4 drops or equivalent to topside of acetyl bearing. This bearing is between outside of pitch block and outer locking collar, both sides. This should be done every 200 rides or if squeak is heard from bearing.

5. ROLL HUB BEARING. Apply ten drops or equivalent of synthetic motor oil to the top side of the bearing cage. This can be accessed thru the hand holes in the front of the center weldment. Use an oil can with flexible spout to reach into this area. This should be done every 200 rides or minimum once a week.

6. LIFT SYSTEM CROSS DRIVE SHAFT. One drop of synthetic motor oil per bearing. This should be done every 200 rides or minimum once a week.

7. COUNTERWEIGHT SHAFT. Remove old white lithium grease and lightly re-coat with same. Perform this lubing monthly.

8. COUNTERWEIGHT ACTUATOR DRIVE SHAFT. Add one small dab of Mobil EP-2 grease, before and after the counterweight clutch. Do not wipe off old grease.

9. LIFT SHOCKS. Lube with white lithium grease once every 200 rides or minimum once per week. Clean off old grease and lightly re-coat surface. Do not allow old grease to accumulate.

NOTE2. The Mobil EP-2 grease is also used inside the counterweight gear box. Normally no extra service is required on the gear box.

The following section identifies areas of the equipment that need to be checked on a weekly basis.

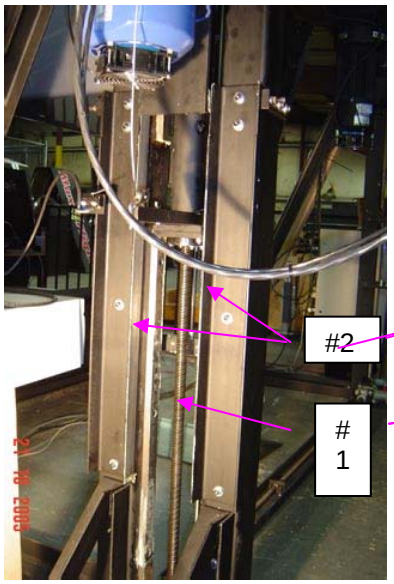

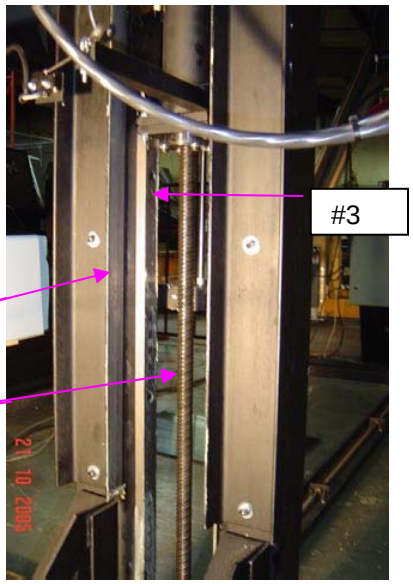

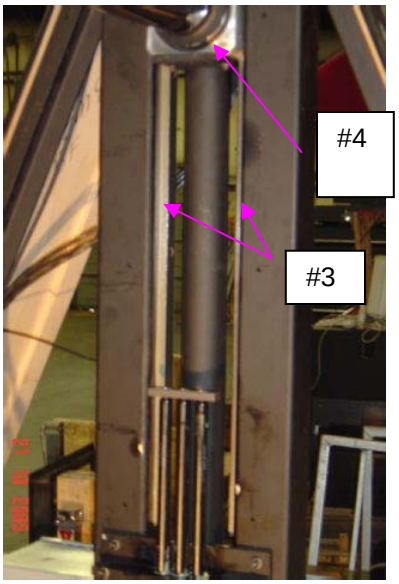

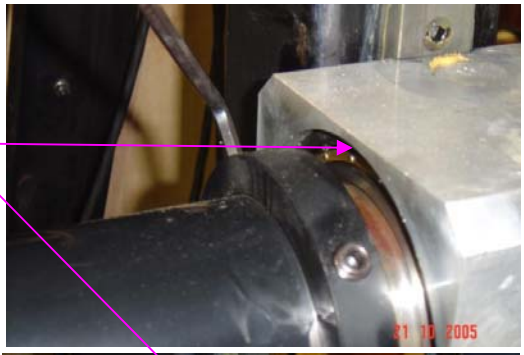

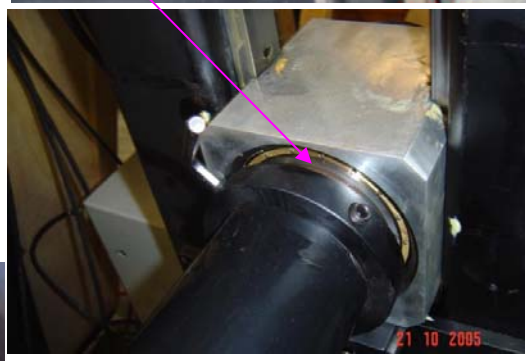

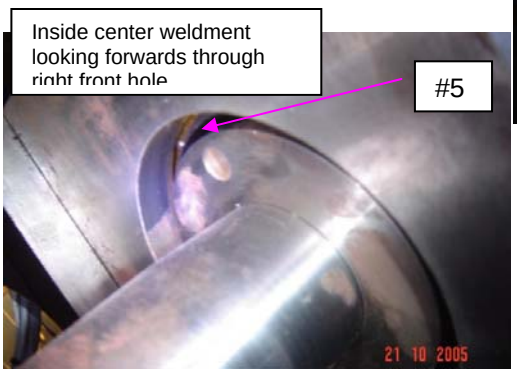

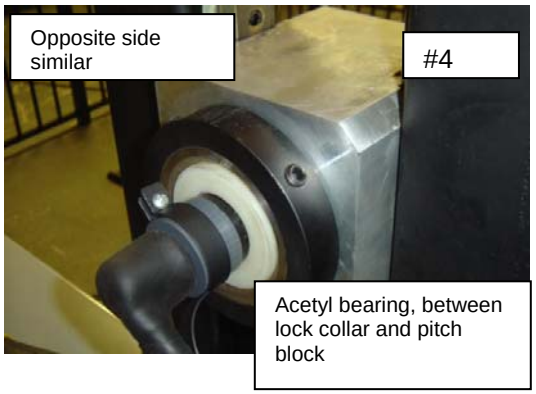
Opposite side similar
#4
Acetyl bearing, between lock collar and pitch block

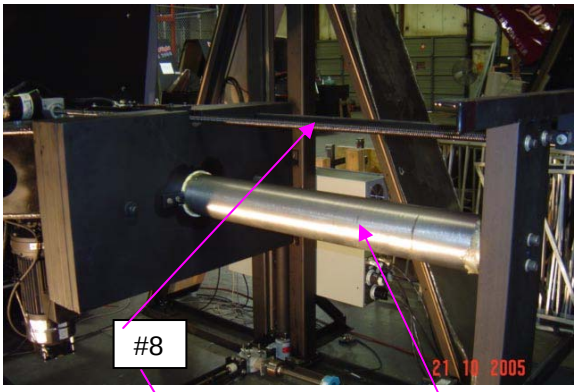
#8
21 10 2005

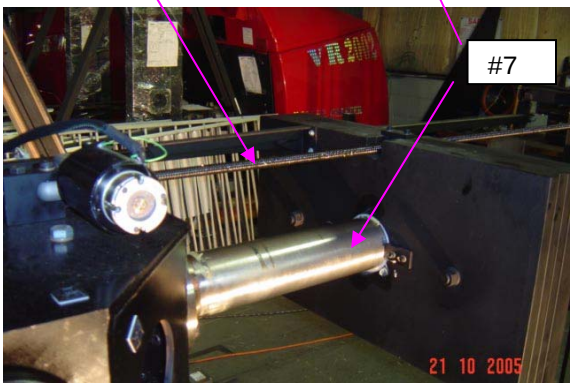
#7
21 10 2005

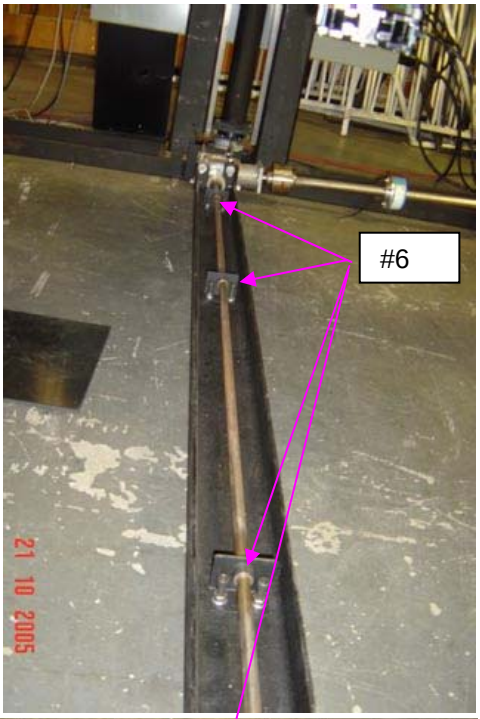
#6
21 10 2005

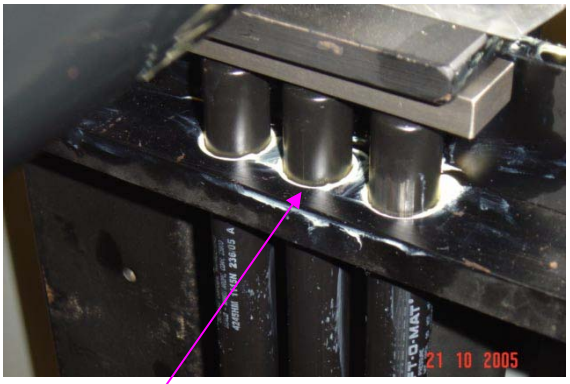
21 10 2005

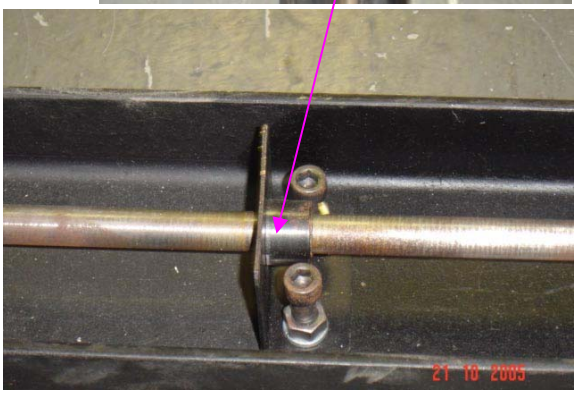
21 10 2005

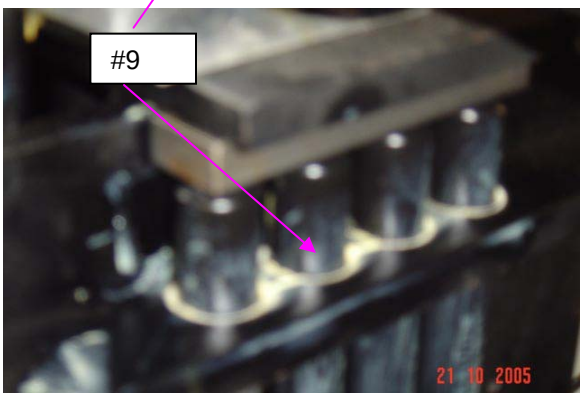
#9
21 10 2005

5-2B Roll Ring Sub-Assembly
Inspect the condition of the roll ring sub-assembly. Verify that the slip rings are free to rotate and free of external contaminates that may enter the rings.

5-2C Pitch Ring Sub-Assembly
Inspect the condition of both pitch ring assemblies. Verify that the slip rings are free of external contaminates that may interfere with data transmission. Verify the cable support system is secured to the A-Frame cabinetry

5-2D Pitch Shaft Assemblies
Check for proper installation, safety wiring and older style have safety plugs installed.

5-2E Key Way Sub-Assemblies
Inspect the keyways for damage and tightness of the bolts. Lubricate the guides with a lithium grease lubricant.

5-2F Counterweight Sub-Assembly
Inspect the counterweight system, checking for any condition that would interfere with the proper operation of the counterweight system. Clean and lubricate the counterweight shaft at this time. Inspect the retaining bolt safety wires and the bolts for tightness. Lubricate with white lithium grease.

5-2G Counterweight Worm Gear
Lubricate the counterweight worm gear with standard bearing grease once a month to insure proper operation of the counterweight system.

5-2H Electrical System Sub-Assemblies
Verify that all of the electrical connections are tight. Verify that each of the sensor switches (5) are operating correctly.

5-2I A-Frame Sub-Assembly
Verify that the A-Frame assemblies have not moved and that the bolts have not loosened due to vibration.

5-2J Electrical Power Box and Mitsubishi/Lenze Transistorized Inverters
Check the following:

1) Cooling system: Clean air vent, fan, filter, etc.
2) Screws and bolts: These parts may become loose due to vibration, temperature changes. Tighten as necessary.
3) Conductors and insulating materials: Check for corrosion and damage.
4) Inverters: Cooling fan, smoothing capacitor, relay, check and change if necessary.
5) Check circuit protecting contactor and thermal overload relay (OLR) by using the TEST and RESET buttons. See attachment for contactor and OLR information.

5-3 Mitsubishi Transistorized Inverter Maintenance
Replacement of parts
The inverter consists of many electronic parts such as semiconductor devices. The following parts may deteriorate with age because of their structures or physical characteristics, leading to reduced performance or failure of the inverter. For preventive maintenance, the parts must be changed periodically.

(1) Cooling Fan
The cooling fan cools heat-generating parts such as the main circuit semiconductor devices. The life of the cooling fan bearing is usually 10,000 to 35,000 hours. Hence, **the cooling fan must be changed every 2 to 3 years** if the inverter is run continuously. When unusual noise and/or vibration is noticed during inspection, the cooling fan must be changed immediately.

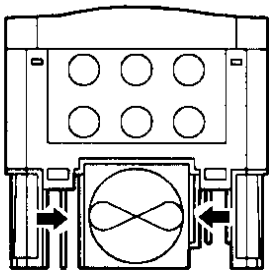

Removal

1) Push the catches on both sides and pull the fan casing down.
2) Disconnect the fan power connector.

Reinstallation

1) Reconnect the fan power connector.
2) Push the fan casing up until it locks into place.

(2) Smoothing Capacitors
A large capacity aluminum electrolytic capacitor is used for smoothing the DC in the main circuit and an aluminum electrolytic capacitor is also used for stabilizing the control power in the control circuit. Their characteristics are adversely affected by ripple current, etc. When the inverter is operated in an ordinary, air-conditioned environment, **change the capacitors about every 5 years**. When 5 years have elapsed, the capacitors will deteriorate more rapidly. Check the capacitors at least every year (less than six months if their life will be expired soon).

Check the following:

1) Case (side faces and bottom face for expansion)
2) Sealing plate (for remarkable warping and extreme cracks)
3) Explosion-proof valve (for excessive valve expansion and operation)
4) Appearance, external cracks, discoloration, leakage. When the measured capacitance of the capacitor has reduced below 85% of the rating, change the capacitor.

(3) Relays

To prevent a contact fault, etc., relays must be changed according to the number of accumulative switching times (switching life is approximately 30,000 rides).

5-4 Extended Periods of Non-Use (6 Months or more)

If the unit is to be stored or left inoperable for periods in excess of six months be aware of the effects the environment on the equipment. Such things as temperature, humidity, sunlight, oils, solvents, corrosive liquids/gases and insects can affect the systems.

5-5 Harsh Environment Conditions

If conditions exist in which humidity, dust, corrosive materials or any other type of particles that would collect onto or corrode exposed materials in a fashion thereof, then the scheduled maintenance will be required twice as frequent as specified in the current time intervals. A determination of the environment whether it be inside a humid facility or near an exposed opening that moisture can enter or near a dust or dirt-collecting area should be examined. Keeping the system properly lubricated and cleaned will aid in the longevity of the system.

During the course of operations some problems may develop. This chapter has been designated to assist in the locating and repair of any problem that affects the operation or safety of your simulator. At all times basic troubleshooting procedures will be the most effective method to use. When working on the electrical system always check the proper power is present. Make sure the Electrical Control Box is unplugged and all the inverters are discharged before working on any electrical components inside the panel. This chapter has been broken into the following two sections: Electrical, and Computer.

5-6 Cleaning of Cockpit and Consoles

Cockpit fiberglass can be cleaned using A good glass cleaner for heavy smudges, followed up with a furniture polish like “PLEDGE” or a wax made specifically for fiberglass. The consoles and the rest of the cabinetry surfaces can be cleaned using a furniture polish like pledge spray. Always wipe off residue and polish. **NEVER** wipe the fiberglass area with a dry cloth, fine scratches will dull the finish.

5-7 TROUBLESHOOTING

Whenever a fault occurs during the operation of this simulator and before you start troubleshooting, ask yourself some questions. When did the problem occur, what was the machine/operator doing prior to the event or what maintenance action was taken prior to the event. Where is the problem? Use the simplistic approach and don’t go for the major parts. Read the information and use the diagrams provided for you in this manual. If all else fails, call Maxflight Tech Support for help, Phone 1-732-281-2007 Ext. 300 during the evening or Ext. 235 during the day.

Day time is 0800 to 1730 Eastern Daylight Time. Rest of the day is on a Beeper response system. When calling, please leave a valid number, your name and place of business, nature of problem and what you have tried to correct the problem.

Normal response 5-20 minutes upon receipt.

If EMERGENCY state so, faster response, usually within 5-10 minutes upon receipt of notification.

5-7A Power Problems

Is the unit plugged into a live circuit?
Electrical Requirements: Three phase 480 VAC for drive motors and inverters.
Single phase 110/220 VAC for the command console, kiosk and cockpit requirements.

Ensure power is available by checking circuit breakers. Measure power in the electrical panel on the magnetic contactor input terminals. Measure across any two lugs and you should read 208/440/450 VAC depending where you are in the world. If you do not get a reading of such across all then you lost a phase to the machine. Check breakers, input power at the end of the extension or wall receptacle. If the power reading is OK, then check and see if the BLUE reset on the contactor has tripped , if so reset and try again. On the Inverters if power is applied by pulling out the E-STOP you must have a small power ON light at top left side of each inverter. If the computer is up and running you should also have another light on to the right middle of the inverter, this signals that communications between inverter and CPU are OK.

Computer and Monitor power flows from the wall to the command console UPS (battery backup). The surge protect side of the UPS powers up the lower right power strip this in turn powers up the Pre-Amp, Main Amp and cabinet fan. If the GREEN power on light does not come ON solid when UPS is turned on then there is no power getting to the UPS from external sources.

5-7B No Computer Power

Is the monitor ON? Is the UPS ON? Is the power strip in the lower part of console ON?

If the computer is not powering up, check the drive lights. If no drive lights, check the power ON switch at the lower left rear of CPU. If OFF, turn it ON. If UPS green ready light is not ON, try another extension cord from a known good power source and plug UPS into this. Still no green light when turned on, check the reset at back of UPS if out push in if power returns OK. If not, it is a bad UPS. Plug computer and the rest of the components into the power strip. Power the strip with good extension power if all works OK replace the UPS.

Everything powers up except the CPU, this is usually a bad internal 300 watt ATX Power Supply. This 300-watt power supply can be purchased at any computer or electronic supply store. Do not remove the old until the new is at hand so you can match the connectors.

NOTE! Before touching any board or other internal component in the CPU you MUST ground yourself to the CPU cabinet (metal) to discharge any static electricity that your body has. This will prevent you from damaging expensive circuit boards etc. Make sure that all the board /components that require power have the proper plug installed. Replace the audio feed cable from the CD-ROM to the audio board.

5-7C Cockpit Power

Turn cockpit power ON by pressing the toggle switch on the power strip located behind side ABS left side. This powers up the following; cockpit ventilation fans, projector power, projector vent fan and power strip located behind lower ABS dark panel right side under seat. Power flows from the wall to the strip, through the signal slip ring left side pitch shaft, to the center weldment where it connects by plug to the, roll ring then the output from there plugged into the power strip. Make sure everything is plugged into the strip correctly and the power strip is turned ON. To test, use a meter and test at cockpit power strip, then input plug which is the output side of the roll ring, then center weldment connection plug which is the pitch ring output side and finally the power strip itself. If you have power at the input of a component but not the output, then that component is defective.

5-8 Video Problems

See owners' manual for detailed maintenance instructions and warranty information. All electrical units use the "INFOCUS" LP-400 or Hitachi 275/225 series projectors. Signal flows from the on-board CPU,INVIDIA Ge-force card, via cable to the Avery Key, to the projector input side. Should be a VGA signal. Composite-Video signal goes to the external projector/TV.

5-8A No Image

Check that the power plug is all the way connected on side of projector and switch right above connector is turned ON, backlight on the front control buttons comes on if power is available. Check if the vent fan is running. If so, check that the projector plug is plugged into the lower right power strip below cockpit seat. If power is there but projector does not turn ON then you have a bad projector. See warranty. If there is no power at the strip see **cockpit power.**

5-8B Image

If after power turn ON you still do not have test image you probably have bad projector bulb. Replace it with one from factory or Maxflight. Replacement procedures are in owner's manual.

5-8C Test Image but "NO" Other

Check software setting inside the projector:

Press MENU this opens the on-screen menus. Scroll left/right by pressing the left or right arrow buttons on front. Press MOUSE button to select within a menu.

NOTE! For Hitachi Projector Settings go to Paragraph 4-2 this manual.

5-8D Set Projector to the following settings (Infocus)

Scroll to "Image"
Set AUTO Image ---ON
Auto Resize----------ON
Scroll to "CONTROLS"
- Standby----ON
- Auto Source----ON
- Ceiling-----ON
- Rear Projection---ON
- Default----CMPUTER
- Plug/Play---ON
- Display. MSG---ON
- Display. Startup---ON

Setting will automatically be saved and "Projector" will come on when cockpit power is turned ON.

5-8E TV plays NORMAL but projector does not

If image at the projector is blurred or fuzzy or otherwise distorted it could be the Avery Key or associated wiring between. To isolate use a jumper from the TV signal source, and plug into the projector input. If now you have a normal image back track wiring to find the problem.

5-9 Audio Problems

Routing is from the on-board CPU sound card to the INPUT of the main power amp. There are two twist connections at the rear of the main amp. Each side has a red and black twist point. The connections are directly to the cockpit seat and front speakers.

Each channel has a separate volume control on the front of the main amp so separate noise levels can be maintained inside of the cockpit area.

5-9A No Sound

Ensure the following:

CPU is ON - program running.

Main Amp – ON - power light is ON, set volume controls to one-third volume setting.

Double click on speaker icon, lower right on screen if there and raise the volume bar, retest. OR go to the wave files and double click on any, sound must be heard if not, open audio control panel and ensure input/output has not been muted.

5-9B IF SOUND BUT NOISY, SCRATCHY

Wiring problem, overdriving the amplifier. If not, decrease sound level in the CPU and try again. If good OK , if not check wiring.

5-10 IF UNIT DOES NOT RAISE

If a new inverter was installed it must be programmed prior to running the program. Inverters main power not enabled. Pull E-Stop out. If it runs OK you're done. If not check to see if lift motor is plugged into the electrical box and its associated brake cable is also plugged in. If unit is lowered ensure it touches and engages the HOME sensor. Check on sensor left side middle of A-frame to see if depressed. Use meter with power OFF and see if switch is good. Factory set but adjustable.

5-10A Canopy Sensor

This is a normally closed switch, located top center of the inside cockpit seat frame .Use meter and test switch operation. Check to see if it is adjusted correctly if not, adjust it so that it triggers just as the canopy latch pops to the first stop.

Safety Stop, if depressed, will stop the unit from raising. Reset and try again.

5-10B CPU Program

Program lockup will prevent the unit from raising. Exit the program, restart, and normal operation should be regained.

5-10C Unit Raises but Not Normal

CPU program error, lower the platform restart program. If same after restart, exit CPU completely and restart. Check lift encoder tie bracket, must hold encoder snug. Check connector at lift encoder, must be tight.

5-10D Lift Encoder

The lift encoder, located on the left side middle inside A frame attached to the lift gear box output shaft. Test operation of encoder by opening "Mitsubishi" inverter test program, manually raise the unit and see if the lift encoder readings change in value. If not, bad encoder or control cable faulty interface board bad CPU motion control card. If encoder has green light on power is reaching unit. Replace temporary with another axis encoder if OK bad encoder if not start testing cable board etc.

5-10E Faulty Motor Drive Brake

If the brake solenoid to the lift motor does not release then erratic raise motion will occur. Test the brake relay located inside electrical power box.

5-11 UNIT DOES NOT COUNTERBALANCE

Remove tail cover or have someone monitor counterweight and motor action. Open "Mitsubishi" inverter test program, press << icon and the weight should increase or go rearward. Press the >> icon and the weight should decrease or come forward. If this does not happen, test the power input to the counterweight inverter and output power, test the brake release power at the brake relay output. Counterweight inverter is located inside power box to the far right side of the box. It is the smallest inverter there. Input power is 230 VAC 2-phase to the inverter and when commanded to move the weight power comes out at the output bottom right side. If weight does not move, CPU failed to send a command, or inverter bad. Brake relay is 115 VAC at output side of inverter built in contact.

NOTE! Command movement of the motor - If brake at rear of motor clicks it's a faulty motor or inverter. Problems can also be; Bad motor, bad or frozen gearbox, no power getting to the motor. If no power is getting to the motor test at other side of the power pitch ring located above the power box. Test power interface connections at the center weldment.

5-11A Unit Fails to Counter-Balance

Can be caused by faulty pitch encoder, pitch brake or brake solenoid failing to release pitch brake, faulty interface board or motion control board in the CPU. The encoder can be tested by using another

axes encoder. All encoders are alike. Test interface to the CPU by moving platform in pitch mode using the "Mitsubishi" interface test program. Platform storage stand spacing wrong at front and or rear. With the counterweight making rear tail sit on the support the bubble must read level, if not adjust stand accordingly. There should also be only a ¼" space between cockpit underside and the top of the front storage rest stop. To test pitch encoder output at balancing point, raise unit to balancing point, stop power (E-Stop in), read encoder on panel must be greater than 1 degree to make counterweight move.

5-12 PLATFORM LOWERED SENSER

This switch/sensor is located right side middle of inner A-frame located and set under lift jack tube. Factory set but adjustable. Its function is to reset all encoders to zero at the completion of a cycle. Also it triggers the CPU to release the pitch and roll brakes as unit touches down on its stand. It can prevent the raising of the unit if faulty and prevent proper counterbalancing at raise cycle.

5-13 FAILS TO RAISE LEVEL IN PITCH OR ROLL

Normally caused by front stand spacing being further than ¼" from bottom of the cockpit area. This will allow roll to not level. Adjust front stand to correct. If OK, could be imbalance of load i.e.: not within the 100 pounds between left and right occupant. Loose encoder on the roll or pitch motor.

5-14 OCCUPANT SAFETY SWITCH,

Located in the cockpit between the two seats. Enables occupants to signal operator that they want to stop the ride. When depressed, it will halt/pause the program, stop motion of unit, allow the unit to turn to the home, level position. Operator lowers unit, asks for reason, if accidental locks cockpit, raises unit clicks on resume icon and unit will finish the program. Switch is a normal ON/OFF type switch and not adjustable. Can be tested in setting pages or on Monster Trucks in Joystick pages.

5-15 UNIT STOPS MOTION

Canopy sensor activated by either canopy latch releasing, faulty switch or damaged switch dirty slip rings. When the switch activates, it will stop motion immediately and freeze the program running on the TV. An alert condition will show on CPU monitor. Operator must depress the E-STOP, removing power to all the motors. Manually level all axes and manually lower the unit to the down position. Exit all occupants and have maintenance repair and test the unit before allowing further rides.

5-16 NO ROLL OR PITCH MOVEMENT WHILE ON TOP

If motion in an axis is slow or erratic it is due to a faulty brake release for that axis. Test the inverters and brakes in the manual mode. If brake is released and movement is still erratic it is usually a bad inverter. A faulty up or canopy sensor that is intermittent, will allow erratic motion. CPU program going to freeze frame operation will allow erratic motion. This can usually be corrected by going out of the program, defrag the disk and go back to running.

5-17 UP SENSER FAULTS

Unit raises normal, balances, goes to the top and program freezes. No platform motion. Alert condition " Platform was raised but does not see the up sensors". At the present there is no place in the CPU pages where you can monitor these switches to see if logically the CPU sees them. Test the old fashion way by continuity tests and voltage tests. Test at interface board across terminals for each switch. If voltag4e goes from zero to 5 VDC then the CPU is supplying power to them but you do not know if the CPU motion card or CPU program can read these signals. Test cables, replace motion card to isolate the problem. Could be faulty ribbon cable to the interface board.

5-18 MAINTENANCE WARNINGS and CAUTIONS

5-18A WARNING!

Shock Hazard and Electrocution Hazards exist inside the CPU and around the inside of the electrical box that houses the inverters.

5-18B CPU

CPU has 115/220 VAC available to the power supply.

5-18C INVERTERS

There is 208/380/480 VAC available within the power box enclosure. When you want to make OHM measurements for any reason within this box, remove the input power and allow a wait time of at least ten minutes to allow the power capacitors within the inverters to drain to zero. These capacitors store over 400 volts and can cause electrocution, and/or damage test equipment at the least.

NOTE: See the warning above before testing or replacing these units. Also insure that the replacement inverters are pre-programmed after installation and prior to use.

5-19 Maintenance and testing of Motors

5-19A If you suspect that a motor itself is at fault it can be troubleshoot using the power ON and power OFF OHM test.

a. Ensure power is removed by placing E-Stop to OFF button depressed.
b. Open the wiring junction box on the suspected motor and remove the insulation wrappings on all lead pairs. Carefully place them so that neither touches each other nor the frame of the motor.

WARNING! Any motor other than lift that is tested under power ON conditions the unit must be in the fully raised position or grave damage to equipment or personnel will result by motion of the platform.

c. If required, RAISE the unit for testing either the Pitch or Roll motors.
d. Using a voltmeter set to DCV place one lead on L1 the other lead on L2 power lead coming into the junction box. See drawing attached "Motor Test Procedures"
e. Staying clear of rotation plane of affected axes, have another person activate power by commanding rotation from the computer console.
f. You should obtain minimum of @ 480 volts on the meter between phases L1,L2 and/or L3 input leads. If you do not then the problem is towards the power box. Either rings, wiring or inverter in power box. Isolate by testing wiring backwards. Use the end to end diagrams provided in the electrical section end of Chapter 2, to see routing and plug numbers.

5-19B Testing the motor windings for shorts to ground .

i. Ensure power is removed from the motor and the rest of the motion platform.
ii. Open the wiring junction box.
iii. Remove all insulation over wiring junctions. List what pair goes to what color input wire for later reference.
iv. Performing the steps as outlined in drawing "Motor test Procedures" perform the OHM test of each lead to ground.
v. If you obtain a reading on any lead to ground this is an indication of a faulty motor. Call Tech services for advice.

5-20 Setup and Calibration of Joysticks and Throttle Controller Interface

5-20A Enabling and Verifying Joystick/Throttle Operation using RPC boards.

a. On the desktop, right click MY COMPUTER, select Properties
b. Single click (+) Device Manager
c. Single click (+) USB Drive Controller
d. Double click on Human Interface USB 0 or 1
   i. 0 for the left side

ii. 1 for the right side

e. Select Properties, verify Started and Enabled

f. Select Analog, move each stick through its paces for each respective board you should see;
   i. Readings never be at or near "0" value or
   ii. At or above 4095 value

g. If readings are beyond the above limits, re-center the respective potentiometer or replace that defective stick

h. Select Digital, activate all switches, the indicators should activate/move.

5-20B Enabling and Calibrating Joysticks/Throttles running USB control Boards.

a. START on task bar, select Control Panel, select Gaming Options
b. Both USB adapters must be visible
c. Click on one or the other and select Properties
d. Click settings tab
e. Click Calibrate and follow Wizard instructions
f. Select Test and then Apply

5-21 JOYSTICK/Throttle setup within Mondo flight program USB Controllers (RPC)

Open the program control window for Mondo
D-click on Configuration icon
Under Device Manager---Double Click to open
Click on or create USB Interface #0,#1
Enable --- USB Interface—Double click on it when other page opens, go to device, ensure it is enabled and started. If not do so. Say OK

Click on or create Maxflight I/O System and enable just like USB Interface

NOTE! Falcon sets up Left seat, Falcon2 sets up the Right seat.

Double Click on User Joystick 0 or 1, opens input page
Select and/or Create:
+ Falcon
+Falcon 2nd Player
+Player

Go to Input Devices page tab and click
Select and/or Create:
USB Interface" 0" and "01"
Maxflight I/O System

Go to Axes **NOTE!!!!** Select USB Interface "0" or "01" under all conditions except where noted under "**PLAYER"**
Select:
<u>Falcon</u>
Aileron select X axis, Calibrate by moving flight stick FWD click left 100% BACK right 100%,CNTR 0% (RPC #3)
Elevator select Y axis, Calibrate by moving flight stick (R) click left 100% (L)left 100%,CNTR 0% (RPC#2)
<u>Falcon 2</u>
Aileron Same as above (RPC#1)
Elevator (RPC#6)
Go to Sliders

Select:

Falcon

Thrust-- select Throttle, Move FWD click 100% move REAR click 0% (RPC#4)

Falcon 2

Thrust select Throttle, Move FWD click 100% move REAR click 0% (RPC#4)

Go to Buttons Select:

NOTE! **Test by pressing respective buttons**

Falcon

Trigger check digital, #0 (RPC#0)
Missile check digital, # 1 (RPC#1)
Wheel/Brake check digital #4 (RPC#16)

Falcon 2

Trigger check digital #0 (RPC#3)
Missile check digital #1 (RPC#4)
Wheel/Brake check digital #4 (RPC#16)
Toggle Player check digital #5 (RPC#0)
Enable 2nd Player check digital none (RPC#0)

Player

Emergency select(Maxflight I/O) check digital DI0

5-22 Setup and Calibration of USB Minilab 1008

USB-Minilab 1008 Flight Controller and Digital Board Input

Effective on machine EM-72 on up if the unit is a Flight Simulator or a Monster Truck, the interactive controller will be manufactured by Minilab 1008.

This controller allows for more digital as well as analog inputs required by today's advanced simulators. Setup and calibration has not changed much from previous systems.

Once, the unit has been mapped, by software and adapted to an individual program, use is the same as prior controllers. The functionality has been expanded by allowing the software designers, to incorporate more interactive controlled functions in the running program.

Digital Adapter Board

The digital adapter board is attached to the Minilab Controller, by a 37 pin ribbon cable. The board has terminal connections for a total of 37 inputs. These terminal connections can also be utilized when troubleshooting problems associated with joystick and throttle switches. The pin out is as follows:

1	N/C	20	USB+5V
2	N/C	21	GND--- Throttle GND
3	PortB7- RJ hat right	22	PortC7—spare
4	PortB6- RJ hat left	23	PortC6—spare
5	PortB5- RJ hat fwd	24	PortC5—spare
6	PortB4- RJ hat down	25	PortC4—spare
7	PortB3- RJ lower sw	26	PortC3- RT thumb sw
8	PortB2- RJ mid sw	27	PortC2- RT trigger
9	PortB1- RJ top sw	28	PortC1- LT thumb sw

10	PortB0- RJ trigger	29	PortC0- LT trigger
11	GND- RJ ground	30	PortA7- LJ hat right
12	N/C	31	PortA6- LJ hat left
13	GND- LJ ground	32	PortA5- LJ hat dwn
14	N/C	33	PortA4- LJ hat fwd
15	GND	34	PortA3- LJ lower sw
16	N/C	35	PortA2- LJ mid sw
17	GND	36	PortA1- LJ top sw
18	N/C	37	PortA0- LJ trigger
19	GND		

These are digital connections only on DB37

Analog inputs to the Minilab 1008

See drawing number SE------ for the Right Joystick and Throttle inputs to the Minilab 1008.

See drawing number SE------ for the Left Joystick and Throttle inputs to the Minilab 1008.

Setup, Calibration and Game Configure of Minilab 1008.

The Status LED on the front panel cannot be turned off. It shows the status of the controller.

a. **Steady**---The controller is connected to a computer USB connection.
b. **Blinks Continuously**--- Data being transferred
c. **Blinks three times**--- Indicates initial communication between controller and host PC
d. **Blinks at slow rate**--- Occurs when analog input is configured for external trigger. Stops when trigger received.

Setup of Minilab 1008 Controller

The device drivers must be loaded into the PC for the computer to recognize the controller and its functions when connected to the U-bus connector.

The controller must be mapped to its input functions from the external devices such as each joystick and throttle. This data is stored in regedit files and used by various programs.

Calibration and testing the inputs to the controller.

1. R click on “My Computer”
2. Select and click on “Device Manager”
3. Locate and click on (+) in front of MaxFlight Ubus Devices
4. R- click on “PMD-1208LS Device#1024”
5. Select “Properties” this opens property window with several tabs at the top.

Analog Tab

Check 0check Cntr (10 in window) LJ (Y) axis Roll

Check 1" " " (10 in window) LJ (X) axis Pitch
" " 2 " " "(10 in window) RJ (Y) axis Roll
" " 3 " " " (10 in window) RJ (X) axis Pitch
" " 4 " " " (0 in window) L throttle
" " 5 " " " (0 in window) R throttle

To calibrate the analog inputs from the joystick and throttle position pots perform the following;

a. Click on the "Calibrate" icon on all six inputs.
b. Move the two joysticks through entire circle and then center stick.
c. Move throttle complete forward and back several times.
d. Click the " " icon on all six
e. Click the " " icon on all six
f. Click "Save Changes"

Digital Tab

Left Throttle

Check 16----trigger
Check 17----Top sw

Left Joystick

Check 3---- btm sw
" " 2----mid sw
" " 0----trigger
" " 1----top sw
" " 4----Hat fwd
" " 5----Hat dwn
" " 7----Hat right
" " 6----Hat left

Right Throttle

Check 18---trigger
" 19---top sw

Right Joystick

Check 11---btm sw
" 10---mid sw
" 9----top sw
" 8----trigger
" 12---Hat fwd
" 13---Hat dwn
" 15---Hat right
" 14---hat left

To test the switches on all joysticks and throttles;

Select the "Digital" tab at the top and activate all switches. They must activate each numbered indicator assigned to that switch. Indication will be a blue field.

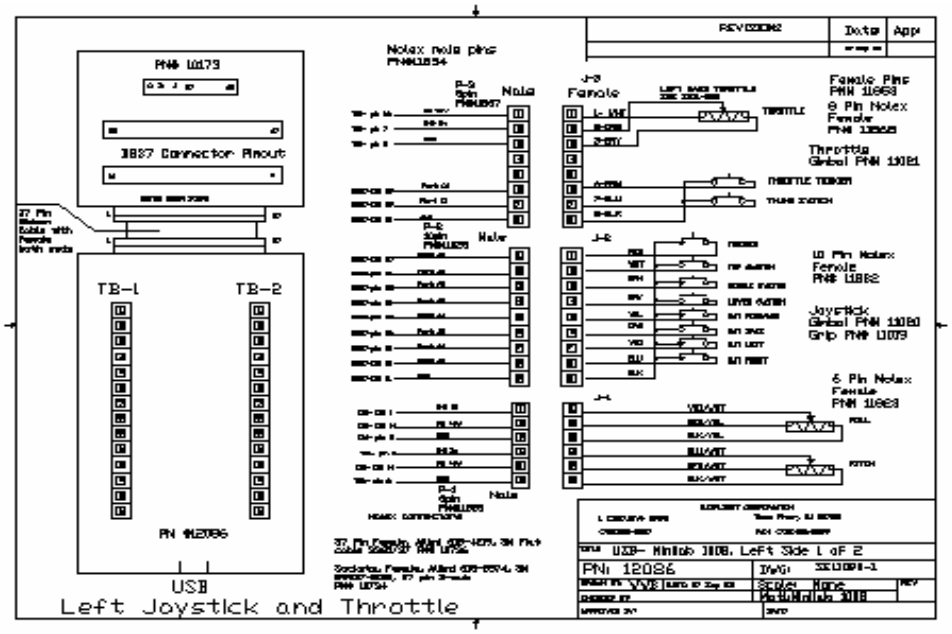

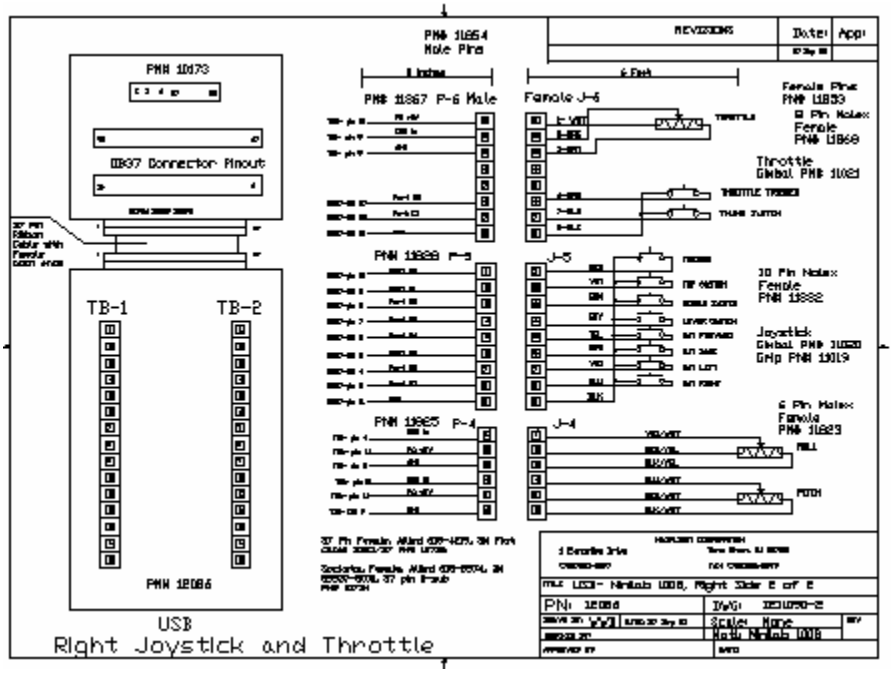

5-23 CREATING AND CONFIGURING THE ARTAFICIAL INTELLIGENCE (AI) JOYSTICK

On the Dual Seat Flight Simulator, the computer generated (AI) players device must be initiated and configured for artificial players to work. This is accomplished by the program automatically by selecting AI players during program setup.

5-24 Changing/Replacing the ON-Board Computer

Should the situation come up where the on-board computer must be changed out or replaced there are certain steps that must be accomplished or neither computer will talk to the network or to each other. Running the on-board programs the command console is set up to remote start/stop programs procedures etc. This is accomplished by matching remote access programs like VNC, using serial numbers of each computer and IP network address plan. If any one are changed they must be matched to the old numbers of the old computer or, as in case at NASM they can be swapped in pairs ie: on-board and command console together. The following procedures are listed in changing matched pairs as well as changing just one or the other computer.

5-24A Changing just the On-Board Computer(Mounted on back of unit)

2. Disconnect all inputs to the CPU and let them hang
3. Remove the three top mount screws, careful not to allow the computer to fall/slam down, damaging computer.
4. Remove computer from enclosure and place aside.
5. Install new computer in enclosure
6. Swing enclosure up and install three mount bolts
7. Reconnect all cables opposite removal procedure
8. Attach a keypad and mouse to the computer and reboot so it sees them
9. Right click on MY COMPUTER, select properties
10. Select Network Identification, select properties
11. Change serial number listed from old to new CPU installed
12. Save setting, restart computer
13. Right click on My Network Places, select Properties
14. Select IP address, select properties
15. Check the box Use the following IP address
16. Transfer serial number and IP identification labels from old to new installed computer.
17. Change the IP address to reflect numbers on IP ident tape.
18. Save settings and exit windows
19. Click on START task bar, Settings, Control Panel, Passwords
20. Delete old MaxFlight Operator and MaxFlight Support entry's
21. Click ADD and type MaxFlight Support, use password (gimpy#broke) all lower case enter again, select administrator privileges, apply now
22. Click ADD, type MaxFlight Operator, use password "(Serial Number of Command Console CPU)", select Administrator privileges, apply now.
23. Click on Administrator entry, select change password, change password to reflect serial number of installed computer ie: number on the tape, apply now
24. Close windows
25. Go back to control panel and select TWEAK, select LOGON tab at top
26. Put checkmark in logon automatically and type the serial number of the on-boardcomputer as password, apply now, close windows, test computer by forcing a re-start and see if it starts automatically.
27. Go back to control panel , select Administrator Tools, select Computer Management
28. Click (+) in front of Local Users, click on Users folder
29. Right click on MaxFlight Operator, select properties, check that password never expires, apply now
30. Repeat #28 with MaxFlight Support, apply now, close windows
31. Click Start on taskbar, select RUN, type in (dcomconfg) and click OK
32. Double click MaxFlight Fmotion, select location tab, enter or change serial number to match command console number
33. Check run application box
34. APPLY
35. Close windows to desktop
36. Right Click small TV icon at bottom right, select properties, open the Linksys setup and verify that the middle window states the network switch that the machine belongs to.

37. Machine 1 to 5 goes to (mvopnet 1, 6 to 10 to mvopnet 2, 11 to 15 goes to mvopnet 3
38. SAVE and close the program, ready to test system.
39. Reboot on-board, verify wireless has two lights showing
40. Go command console and initiate normal program startup sequence or VNC to the on-board using the assigned serial number and password.

5-25 Setting Up the Linksy's Wireless System at NASM

1. Load the device driver into the CPU that the wireless will be attached to
2. Plug the wireless into the USB port and fire up the CPU again. This will show a new hardware item and install the same automatically.
3. You should have two full indicator lights on top of the wireless x-mitter
4. To allow the x-mitter to talk to the network. A receiver must be installed near the switch and powered up.
5. NOTE!!! Each network switch has an identifier that must later be matched to the setup pages of the x-mitter. These are:
   a. mvopnet 1 for machines 1-5
   b. mvopnet 2 for machines 6-10
   c. mvopnet 3 for machines 11-15
6. VNC onto the on-board computer, or, install keyboard an mouse.
7. R click on the TV icon lower right task bar and select setup
8. Select setup tab on top
   a. Profile------Default
   b. Wireless Mode---Infrastructure
   c. Service ID----mvopnet 1, 2, or 3
   d. Transfer rate----Auto Rate
   e. Power Saving Mode----Disabled
9. Select Encryption Tab
   a. Fragmentation----disabled----max to the right
   b. RTS/CTS---disabled----max to the right
   c. Preamble type----Long
10. Select Link Info Tab
    a. Status-----Connected—BSSIO= 00-30-AB-12-82-39
    b. Current Channel--- will show strongest channel --- 1- 11
    c. X-fer rate------11 MPS
    d. Current Service Id.---- mvopnet 1, 2 or 3

5-26 Changing Joysticks and Throttles

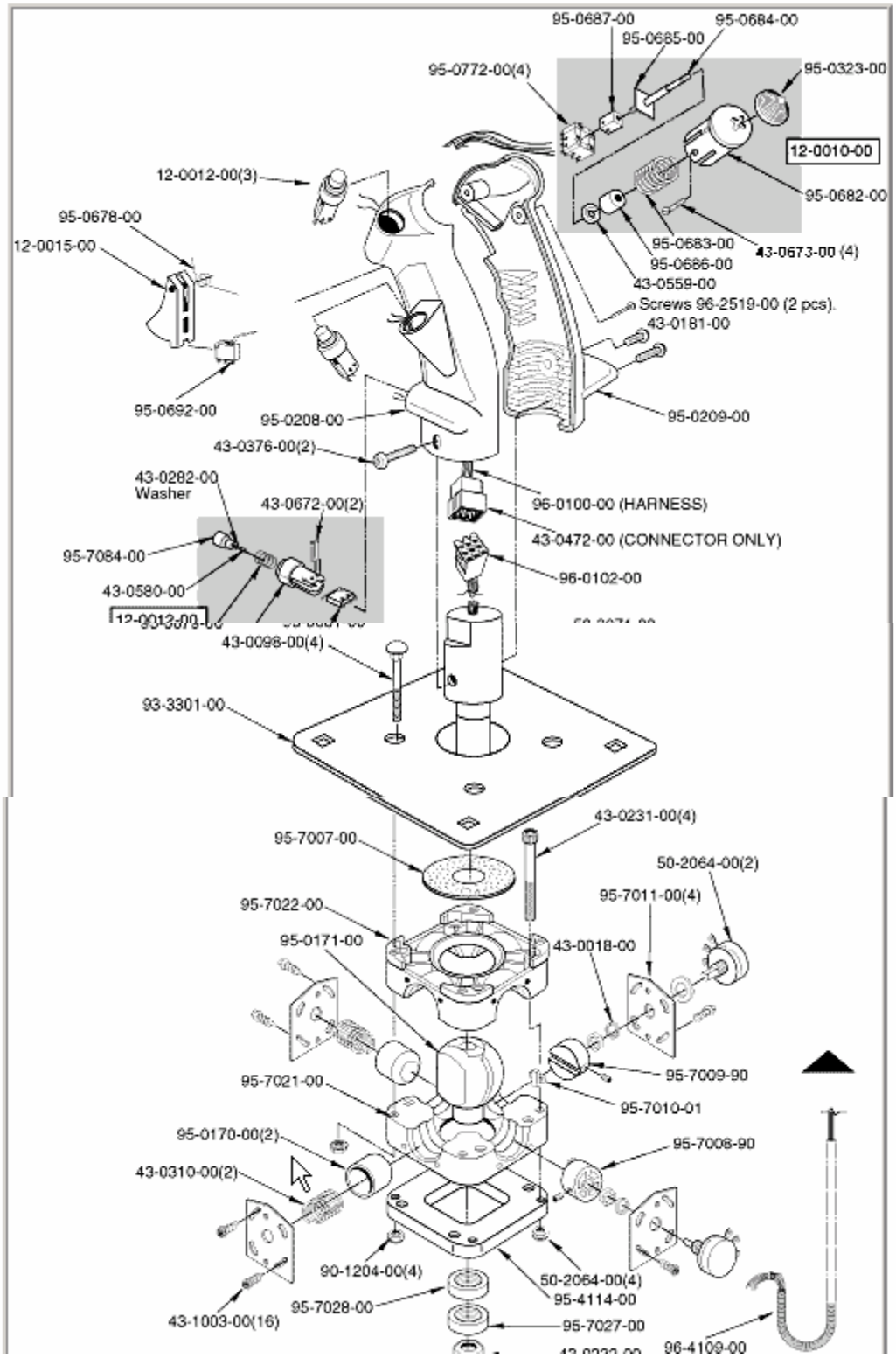

The above shows the parts breakdown of the HAPP Control Joystick used in this flight simulator environment. Removal and replacement is as follows;

a. Remove power to the on-board computer, this removes the +5 VDC supplied to the USB board via the USB cable.
b. Open the center console and disconnect the respective connector to the faulty unit.
c. Remove the mounting hardware holding stick to the console or lower cockpit glass and pull old stick out.
d. Replace new stick the reverse of step (c) .
e. Reconnect plugs to the USB board connectors.
f. Test and calibrate new unit using procedure within this manual. Para 5-20.

CHAPTER 6 – Time Replacement Items

6-1 REPLACEMENT OF INVERTER PARTS

The inverter consists of many electronic parts such as semiconductor devices. The following parts may deteriorate with age due to their structure or physical characteristics, leading to reduced performance or failure of the inverter. For preventative maintenance, the parts must be changed periodically.

6-1A COOLING FAN

The cooling fan cools heat generating parts such as the main circuit semiconductor devices. The life of the cooling fan bearing is usually 10,000 to 35,000 hours. Hence, the cooling fan must be changed every 2 to 3 years if the inverter is run continuously. When unusual noise and/or vibration is noticed during inspection, the cooling fan must be changed immediately.

Figure 1 Fan replacement

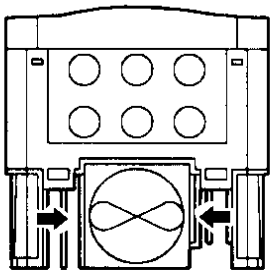

Removal

3) Push the catches on both sides and pull the fan casing down.
4) Disconnect the fan power connector.

Reinstallation

3) Reconnect the fan power connector.
Push the fan casing up until it locks into place.

6-1B SMOOTHING CAPACITORS

A large-capacity aluminum electrolytic capacitor is used for smoothing the DC in the main circuit, and an aluminum electrolytic capacitor is also used for stabilizing the control power in the control circuit. Their characteristics are adversely affected by ripple current, etc. When the inverter is operated in an ordinary, air-conditioned environment, change the capacitors about every 5 years. When 5 years have elapsed, the capacitors will deteriorate more rapidly.

Check the capacitors at least every year (less than six months if their life will be expired soon).

Check the following:

1.) Case (side faces and bottom face for expansion)
2.) Sealing plate (for remarkable warping and extreme cracks)
3.) Explosion-proof valve (for excessive valve expansion and operation)
4.) Appearance, external cracks, discoloration, leakage. When measured capacitance of he capacitor has reduced below 85% of the rating, change the capacitor.

Figure 2 Time Replacement Chart

Part Name	Standard Replacement Interval	Description
Cooling Fan	2 to 3 Years	Change as Required
Smoothing Capacitor Main Ckt.	5 Years	Change as Required
Smoothing Capacitor Control Brd.	5 Years	Change the board as requd.
Relays	----------	Change as Required

6-2 Relays

To prevent a contact fault, etc., relays must be changed according to the number of accumulative switching times (switching life is approximately 30,000 rides).

6-3 Projector Bulb

To prevent an excessive down time, due to the projector bulb burning out, obtain a spare bulb whenever the INFOCUS run time states over 750 hours or Hitachi reaches about 1700 hours. We do not know at this time how long this bulb lasts. This is only a suggestion for having on hand this spare part, not a requirement.

Note: Projector bulbs can be obtained from Infocus direct by ordering from a local distributor or going on the internet to (WWW.INFOCUS.COM) or for Hitachi go to WWW.HITACHI.COM.

Also the projector is warranted by Infocus or Hitachi direct, by a pass through warranty. Any maintenance done to the projector will void the warranty. Should you require a loaner, Infocus or Hitachi will overnight delivery you a loaner for a fee if given a major credit card.

6-4 NONDESTRUCTIVE TEST LIQUID PENETRANT METHOD

Non Destructive test to the pitch shafts, are required only if you have the style as shown in the following diagrams or, the square ended instead of the round flat ended mounting flanges.

These test to be performed as required by state, local or regional governing directives.

The new style, which are beveled counter bored flanges and only welded on the inside, not outside, require no NDI inspections.

MaxFlight Corporation dictates, if you have the flat square or round mounting flanges, that they be inspected at a minimum of annual basis.

- Remove all paint a minimum of one inch of the weld area.
- Clean area with solvent and allow to dry.
- Apply penetrant to test area allowing ample time to seep into openings.
- Remove penetrant remaining on surface without removing the penetrant from openings.
- Apply developer.
- Visually examine the weld for penetrant indications in the developer coating.
- Once again clean the tested area of developer and any traces of penetrant.

STEP 1

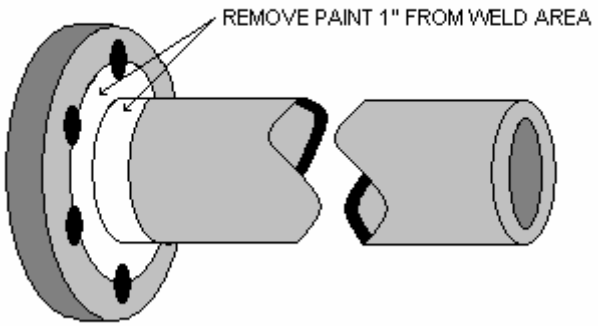

STEP 2

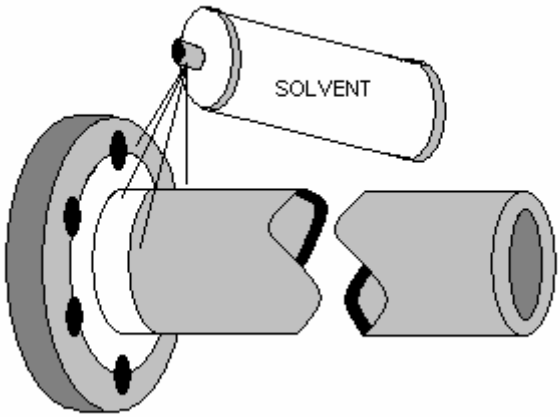

STEP 3

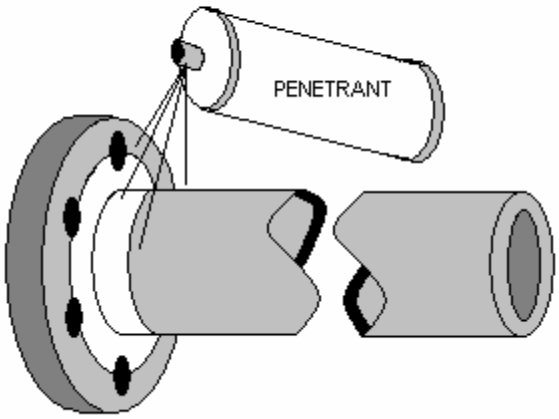

STEP4

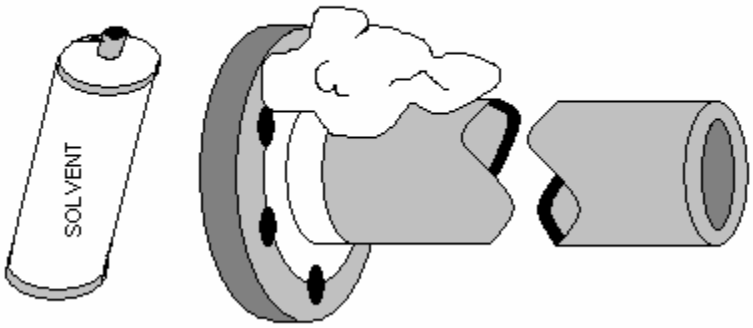

STEP5

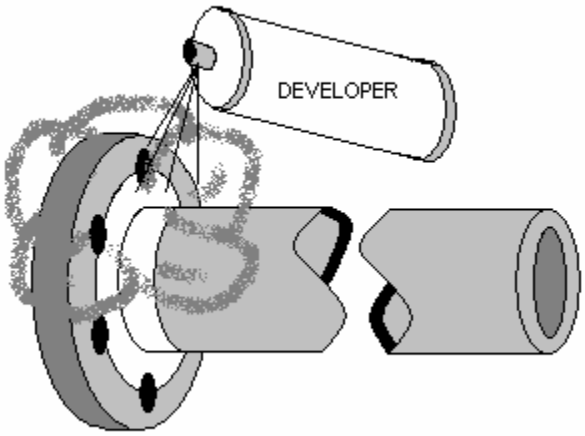

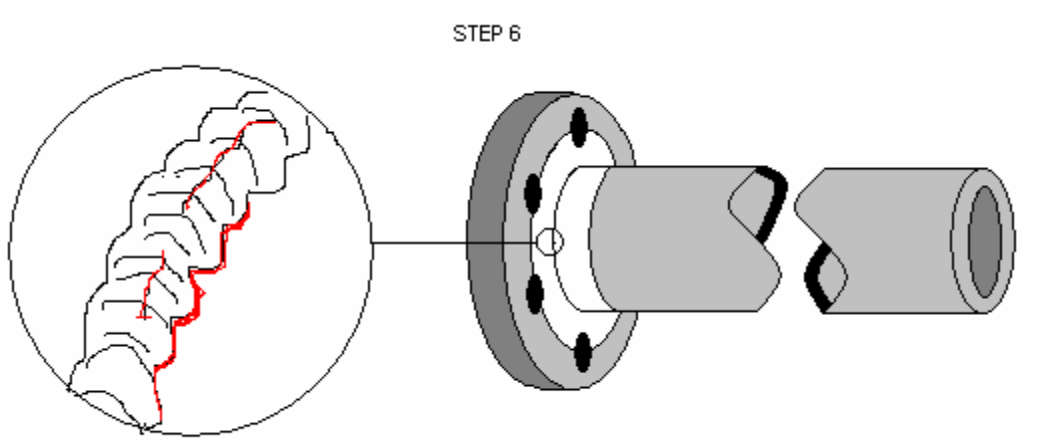

After inspection of all welds clean the remaining penetrant and developer for future inspections.

6-5 Center Drive Shaft Removal/Replacement Procedure

The following steps are referenced by the letters on the pictures

A. Loosen and remove the backup collar, save for reinstallation later.
B. The star drive collar does not have to be loosened it will fit through the bracket hole. The white nylon coupling will stay in place for reinstall.
C. Loosen and remove these mounting bolts. Lay aside will be reused.
D. Loosen backup collar and slide back on the shaft. Will be removed later and reinstalled on the new shaft in the same order.
E. Loosen set screw on star coupling and slide back on shaft. Will be reused later on new shaft in same order.
F. Slide back and remove nylon coupling. Will be reused later in same order.
G. Loosen and remove these mounting bolts. Will be reused later.
H. The Lovejoy coupling can be left intact, there is enough play between the two couplings to allow the gear box to pivot upwards during the removal and reinstall later.
H-1 These mount bolts must be removed for later reinstall. **DO NOT!!!!** Get the two side brackets mixed up. One is longer than the other. Mark them before removal.
I. The gear box Can be left in place at this time.
J. Loosen and remove these two backup collars. One will be reused later.
K. Loosen and move coupling back on the shaft. Coupling **will not be reused.**
L. Loosen but do not remove these bolts.
M. Loosen and remove these two side mount bolts .Will be reused later.

The entire center C channel can now be moved sideways and out.

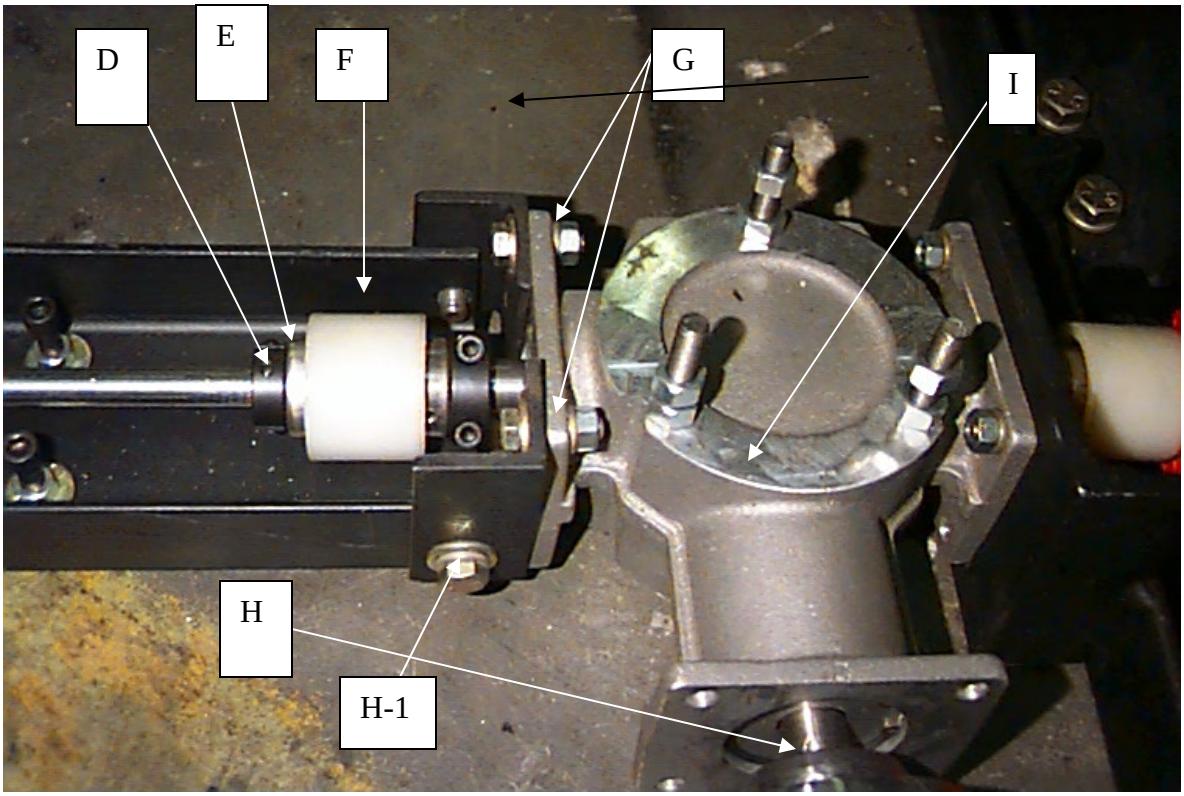

Picture #1

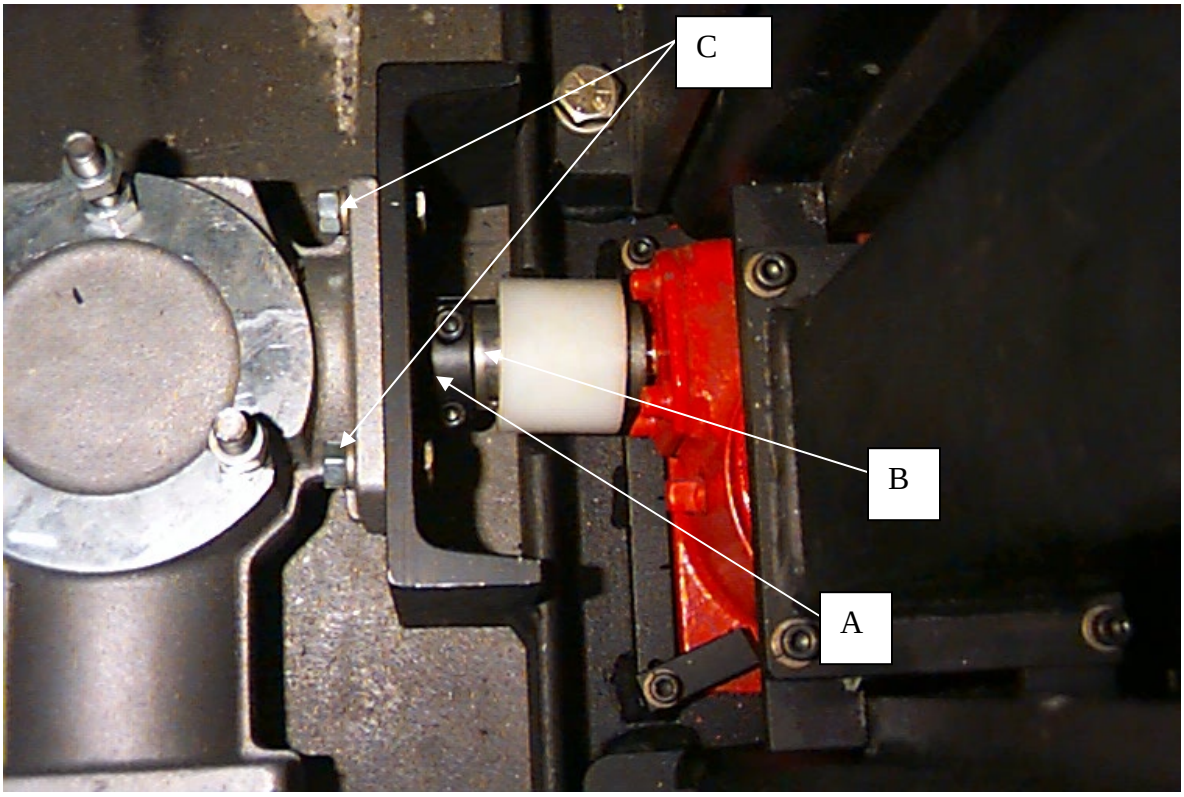

Picture #2

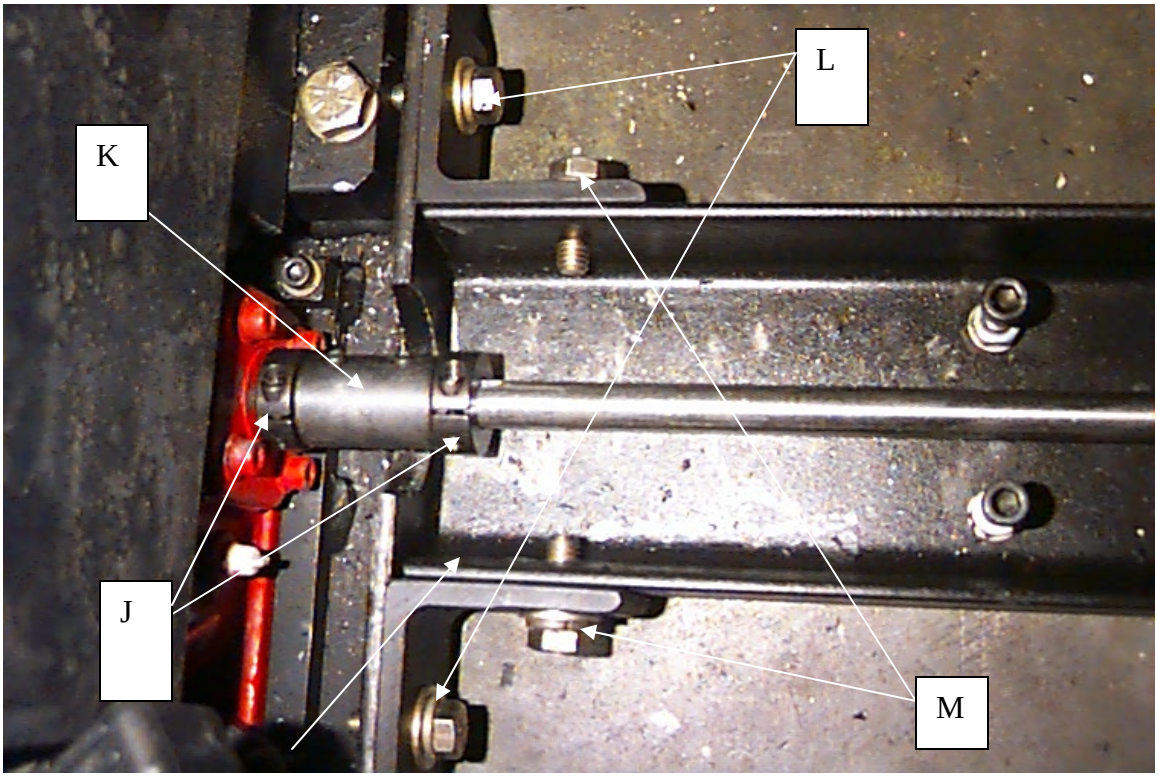

Picture #3

Reinstallation of center drive shaft.

NOTE! To allow drive shaft movement to replace keyways, collars and get to set screws on star couplings, place the Lift brake to full OFF. This allows you to turn the output drive shaft from the lift motor.

WARNING **PLACE BRAKE BACK TO "ON" WHEN DONE WITH INSTALLATION AND PRIOR TO LIFT TEST.**

1. Remove by sliding sideways items "D and E" loosened earlier.
2. Grab the other end of the center shaft and pull it out of the bearings, lay aside.
3. Locate and install the new center drive shaft with the swivel end facing to the left. This reference is from the rear looking forward. Slide the shaft through all the bearings and bearing supports.
4. Install the nylon washer onto the left lift jack gear box input shaft. Pict. # 9
5. Place and install new keyway onto the lift jack input shaft ,left side. Picture # 9.
6. Slide onto the shaft from the right hand side items "D and E" removed earlier. Picture #7.
7. One person holding the right end up, the other person aligns the left swivel onto and over the left input shaft of the lift jack gear box and between channel mounting brackets. Picture #6.
8. Lower the right end of the channel towards the gear box. Grab the gear box and move it upwards at an angle. Match the angles between the channel and gear box and lower both towards the floor.

Caution ensure that the right inside star coupling went into the white nylon coupling. Picture #5and #2.

9. Reinstall side brackets #H-1 removed earlier in the same order as removed, finger tighten lower mount bolts. Picture #4.
10. Reinstall bolts step M finger tight for now. Pict #3.
11. Reinstall bolts from step C and G as removed finger tight for now.Pict #! and 2
12. Insert right white nylon coupling onto the center drive shaft Pict# 7.
13. Insert keyway onto center shaft right end, slide star coupling over keyway and into white nylon coupling. Allow for 1/8" coupling free play side to side.Pict #4 and 5
14. Tighten set screw on star coupling.Step E Pict # 1
15. Push backup collar against star coupling and tighten screws.Pict # 1
16. Align gear box, center drive and right output star coupling in a visual straight line. Pict # 5
17. Tighten the gear box mount screws Step G and C. Pict # 1 and 2
18. Replace backup collar from step A. Tighten screws. Pict # 2
19. Tighten set screw on left swivel coupling half.
20. Replace backup collar on center drive shaft right behind swivel and tighten screws.
21. Tighten screws from step L and M. Left C Channel brackets. Pict #3
22. Ensure drive alignment and tighten screws from step H-1.
23. Re-check all fasteners and collars for proper torque.

WARNING **PLACE BRAKE BACK TO "ON" WHEN DONE WITH INSTALLATION AND PRIOR TO LIFT TEST.**

24. Perform a lift test using "Mitsubishi Test Client" program.

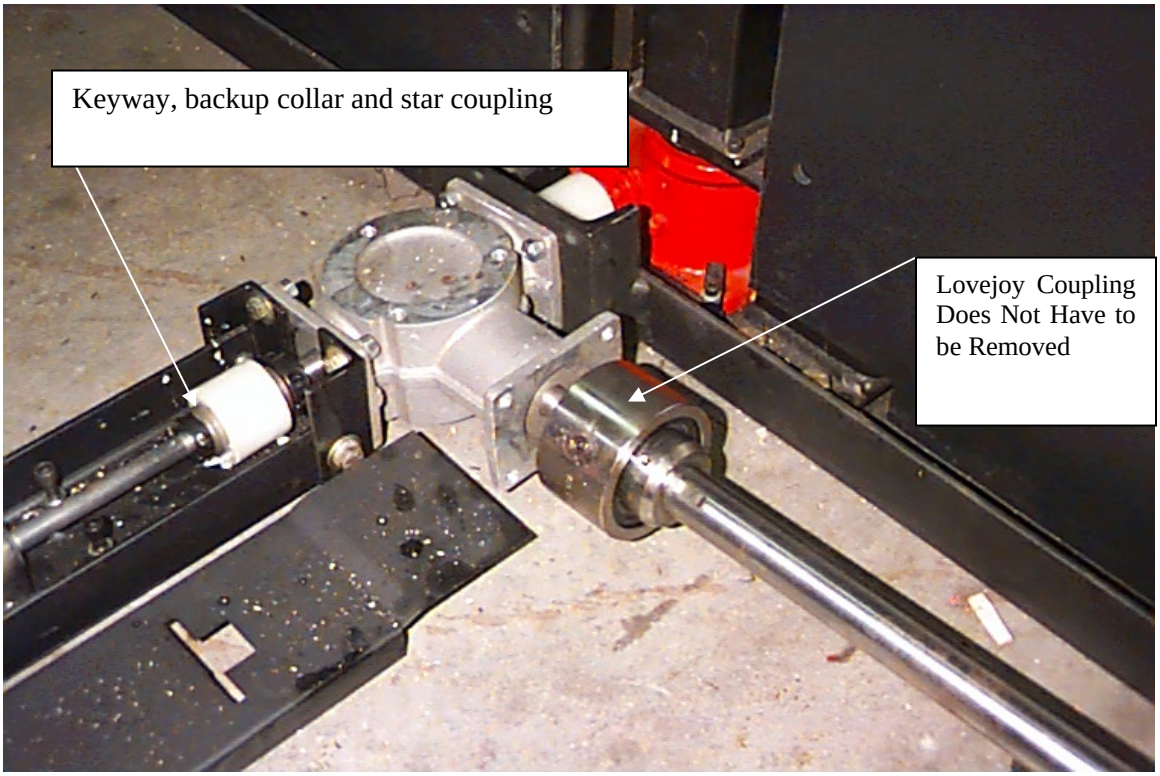

Picture #4

Picture # 5

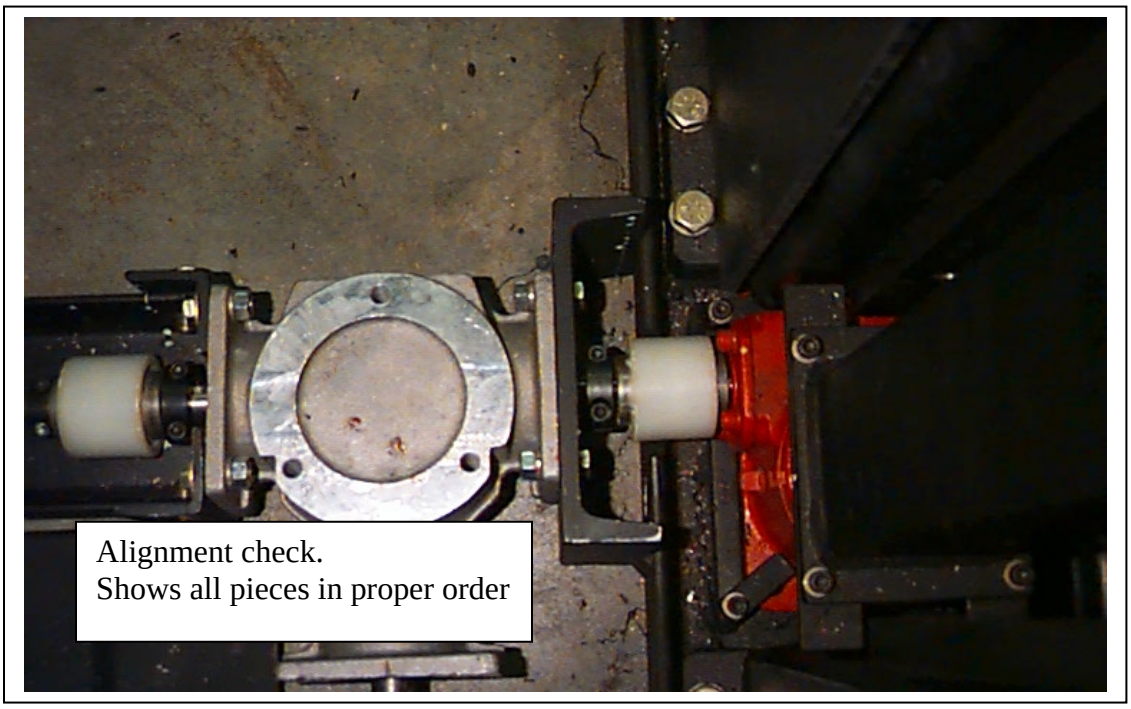

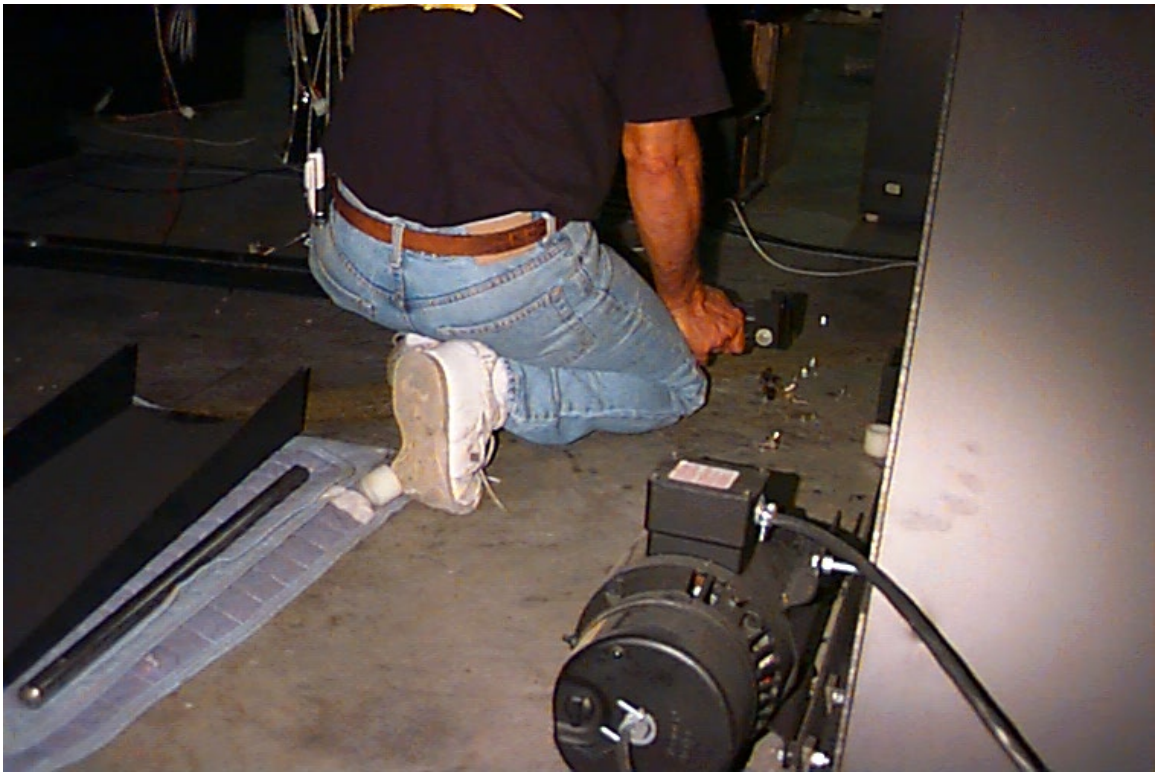

Picture # 6

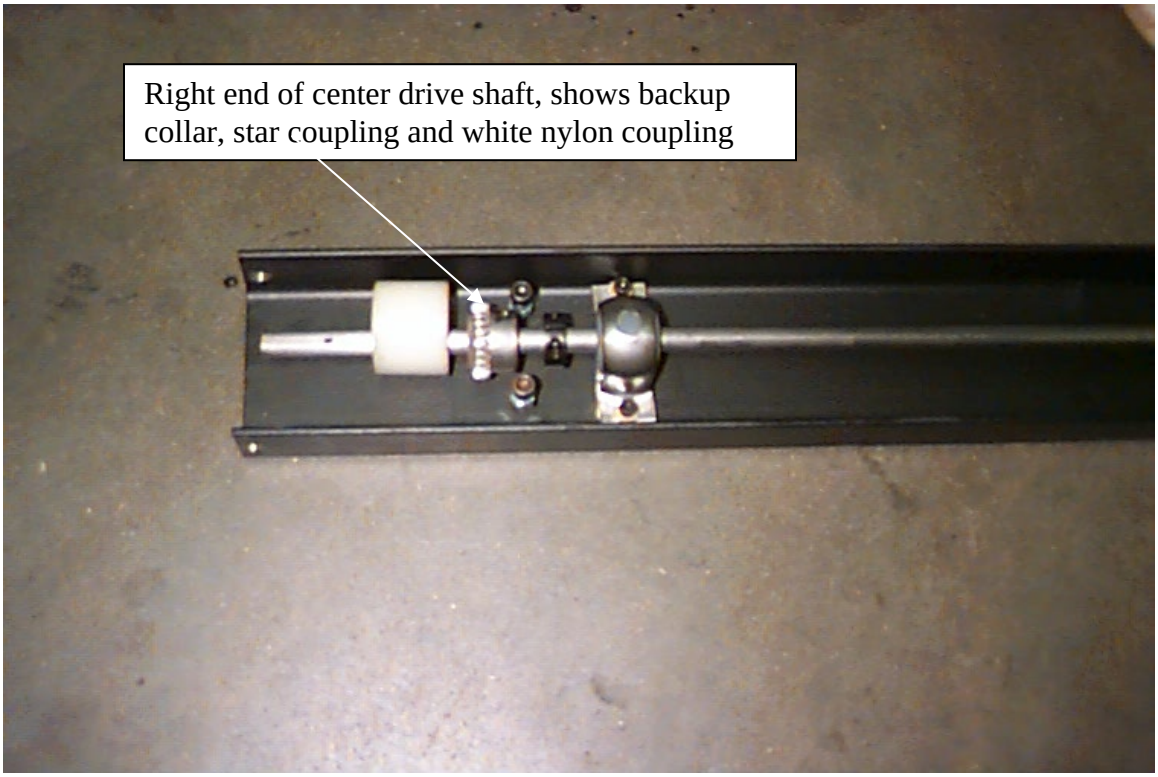

Picture #7

Picture #8

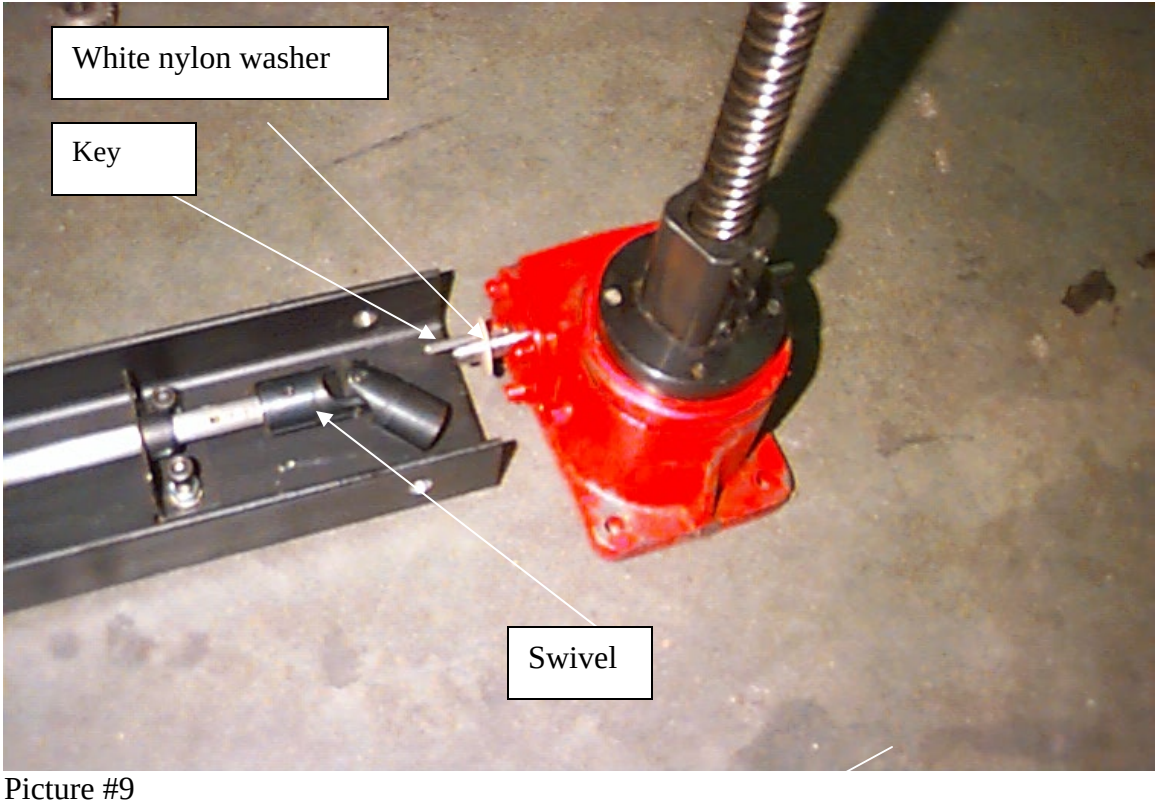

Picture #9

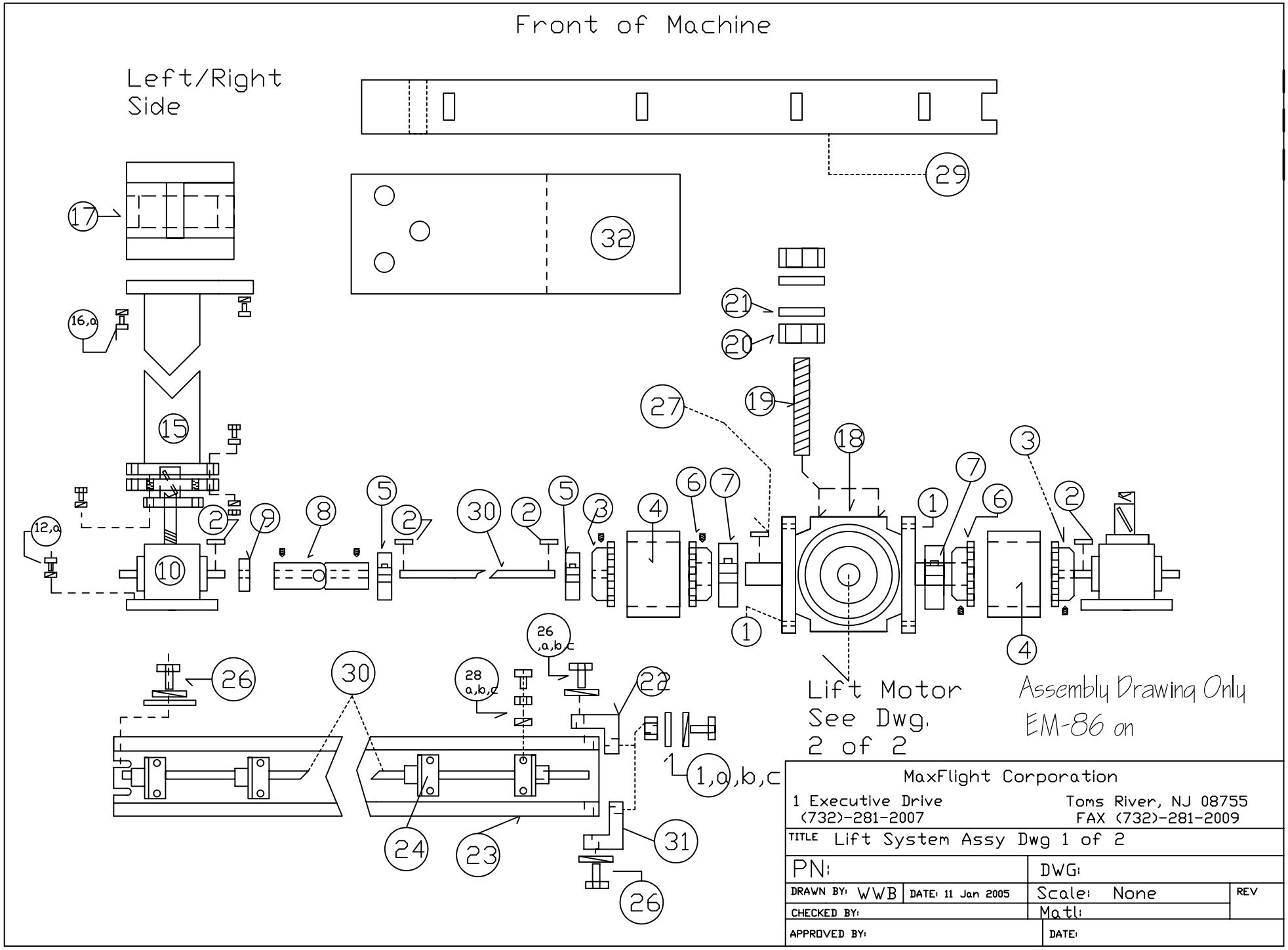
Front of Machine
Left/Right Side
Lift Motor See Dwg. 2 of 2
Assembly Drawing Only EM-86 on
MaxFlight Corporation
1 Executive Drive
(732)-281-2007
Toms River, NJ 08755
FAX (732)-281-2009
TITLE Lift System Assy Dwg 1 of 2
PN:
DWG:
DRAWN BY: WWB
DATE: 11 Jan 2005
Scale: None
REV
CHECKED BY:
Matl:
APPROVED BY:
DATE:

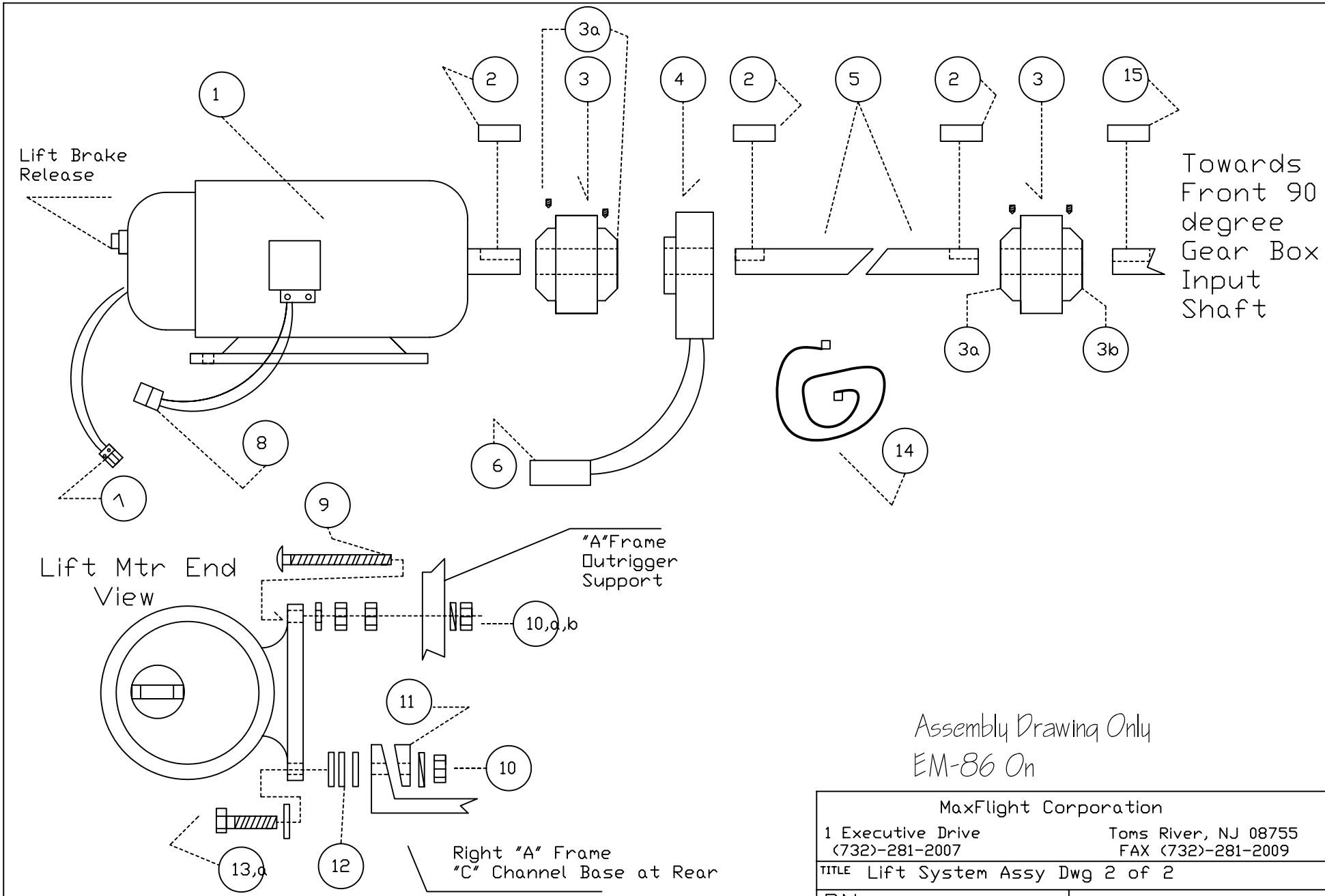

Assembly Drawing Only
EM-86 On

MaxFlight Corporation

1 Executive Drive
(732)-281-2007

Toms River, NJ 08755
FAX (732)-281-2009

TITLE Lift System Assy Dwg 2 of 2			
PN:		DWG:	
DRAWN BY: WWB	DATE: 11 Jan 2005	Scale: None	REV 006
CHECKED BY:		Matl:	
APPROVED BY:		DATE:	

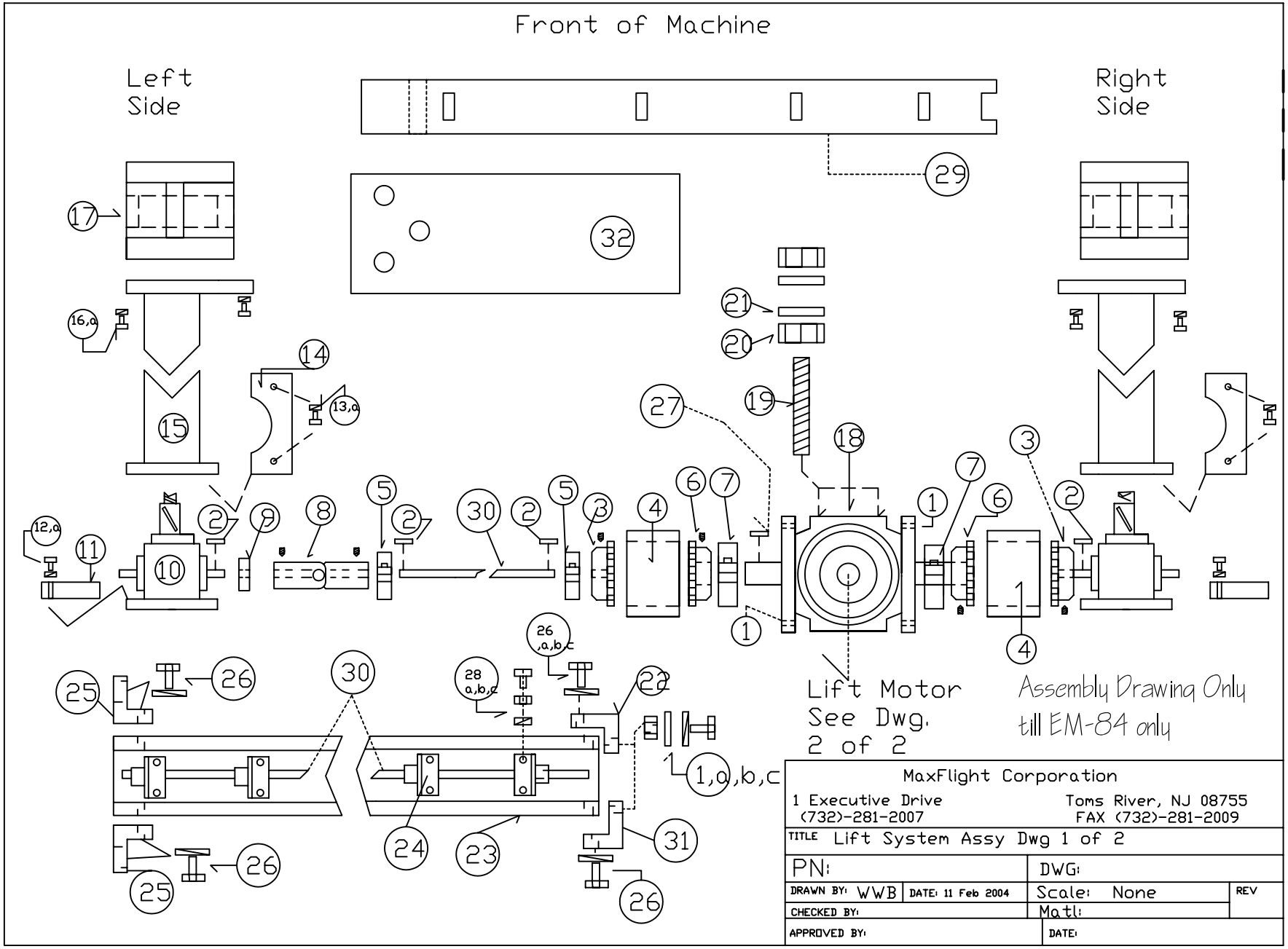
Front of Machine
Left Side
Right Side
Lift Motor See Dwg. 2 of 2
Assembly Drawing Only till EM-84 only
MaxFlight Corporation
1 Executive Drive
(732)-281-2007
Toms River, NJ 08755
FAX (732)-281-2009
TITLE Lift System Assy Dwg 1 of 2
PN:
DWG:
DRAWN BY: WWB
DATE: 11 Feb 2004
Scale: None
REV
CHECKED BY:
Matl:
APPROVED BY:
DATE:

MaxFlight Corporation
1 Executive Dr., Toms River, NJ 08755-4947
Phone: (732)281-2007 Fax: (732) 281-2009

FS2000 Weekly Inspection Checklist

Week Ending:_____
Inspected By (print):_____
Signature:_____

* **These sheets must be filled out completely, kept in your records and faxed to MaxFlight (Attn: Tech. Support) on a weekly basis.**

- ❑ Inspect the Roll ERC (Electrical Rotary Contact) and pins for proper security and condition
- ❑ Clean the projector fans and lens **(DO NOT USE LIQUID CLEANER)**
- ❑ Inspect all connections on the Power Distribution Box for security
- ❑ Inspect the Pitch ERC and Torque Arm for proper security and condition
- ❑ Inspect the counterweight shaft, worm gear and guide rail for any apparent wear, damage, or binding
- ❑ Inspect left and right key-way bolts (both A-Frames) for security
- ❑ Inspect the Up/Down, Canopy and Failsafe Sensors for security and proper operation
- ❑ Inspect the A-Frames for signs of "walking" if unit is not secured to floor
- ❑ Inspect Harness for any weld cracks
- ❑ Inspect safety-wired and visible bolts for security
- ❑ Ensure the Daily AM and PM inspections have been complied with for the past week(See Operators Manual)
- ❑ Lubricate the unit in accordance with the Lubrication Diagram(page 26 of Technical Manual)
- ❑ Check the security of all Encoders, ensure the set screws are tight.

GAME LOG READING

Normal:_____

Hours:_____

Annotate any discrepancies from previous week and corrective actions

_____
_____
_____
_____
_____

ELECTRICAL CIRCUITS LIST

See Separate Electrical Drawing file Index in PDF format

Hitachi Projector Settings for
Models 225 and 275

To obtain the best possible picture from these new style projectors the following settings are he ones we at the factory set into the projector electronics.

8. Turn computer ON, have video signal present at the projector.
9. Turn cockpit power ON
10. Turn projector lamp power ON, using remote.
11. When lamp is bright and signal present using the remote select and set the following parameters;
    a. Select Menu ----all items are default settings except ASPECT, this must be set to the second icon in or 16:9
    b. NOTE! As the projector ages, some or all items may require adjustments to bring the picture back into line. See the manual for item functions.

12. Input Menu –
    a. Select RGB
    b. Auto select auto adjust for RGB input

13. Image Menu
    a. Keystone to “0”
    b. Mirror - H Invert
    c. Start Up – Turn ON

14. Options Menu
    a. Volume to “0”
    b. Menu Color to BLUE
    c. Language to Local desire, default is English
    d. Timer to 15 Min
    e. Auto OFF to select STOP, no standby mode
    f. Sync on G –turn OFF, sync on G Invalid

MaxFlight
FS2000(B)
Installation Manual

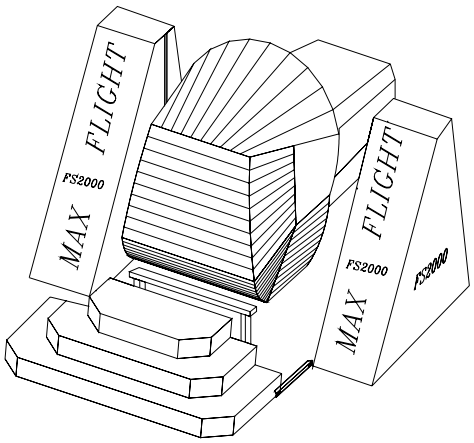

CHAPTER 1 – SET UP

The first thing to do is to check all of the crates according to the packing slip to ensure that everything has been delivered. Next, identify each crate as to its contents. The packing slip is written out by crate or carton to help you find the proper components that will be needed for set up. It will take two or more people to assemble properly and safely.

1-1 Field Torque Procedure

MaxFlight recommends using the Turn-of-the-Nut procedure for all bolts.

Turn-of-the-nut tightening process encompasses a low initial "threshold" torque to achieve "snug nut" condition followed by a prescribed amount of nut/bolt turning to develop the required pre-load. Nut/bolt rotation through a prescribed amount eliminates the influence of all friction variables relative to final accuracies. A one half turn from snug tight on a bolt having a grip length of less than 8 inches will induce pre-load equal to or slightly over the bolts' rated proof load. For bolts greater than 8 inches, two-thirds of a turn beyond snug tight is recommended.

1-2 Assembly Instructions

1. Locate the crates containing the A-Frame assemblies. Uncrate the A-Frame(s) and seek out the center sections. Lay out all of the other pieces to ensure everything is there.

2. Locate the ½"-13 x 1" bolts and lock washers, 16 of each for both A-Frames. The 8" C-Channel can be loosely bolted to the bolt able leg assemblies, one right and one left forward leg assembly gets 4 ea. ½X 13 X 2" hex heads and lock washers, rear facing leg assembly gets 4 ea ½ X 13 X 1" hex heads and lock washers Lower the lift block from top to bottom of A frame with serrated bearing block area facing outward. Locate and install A frame top stop to the A frame top weldment using 2 ea ½ x 13 x 1.5" grade 8 hex head and lock washers. Take this assembly and mount same to the top of upright leg assembly using 4-ea ¾ x 10 x 2.5" grade 8 hex head and lock washers. Hold uprights in such a way to ensure that lift block moves freely up and down along complete guide keyways, torque ¾" bolts then the ½" bolts. Locate one fwd and one rear cabinetry braces position accordingly near base of C channel. Locate one fwd and one rear A frame brace 4" C channel and place near base. Locate 4-ea ½ x 13 x 1.5" hex head and lock washers and place near base each end for two. Locate 4 ea ½ x 13 x 1" hex head and lock washers and place near the top area. Lift fwd brace into position with angle cut up. Install top two bolts and washers finger tight. Repeat for rear. Hold cabinet brace in position outside bottom of brace, install two 1.5" bolts and washers finger tight. Repeat same other side. Using a framing square right angle both cabinet braces to the brace steel and torque bolts in place. Torque top bolts on brace each side in place. Repeat the above procedure for the other A frame. DET-014.

3. Stand the A-Frame up and have someone hold it while you install the A frame lateral stabilizers facing outward on uprights. Use two 3/8/x/18 x 1" Allen cap bolts and lock washers, torque in place. Repeat procedure for second A frame. DET-011

4. Locate the ABS panels for the inside of the A-Frames and their fasteners and attach to the A-Frames. See reference drawing DET-015. Note if speakers are mounted to the panels they go to the front.

5. Place A frames in their relative position where the final assembly will take place. Note, the base C channel that has only one side circle notched in the center is placed on the right hand side of the machine. DET-016

6. Find the center main frame assembly with the cockpit, uncrate and roll into position between the A-Frames. DET-016

7. Locate the pitch arm assemblies and their bolts. Install pitch arm with keyway on left side of center weldment with the keyway facing up. The other pitch shaft on the other side. Loctite with blue, and bolt the pitch arms to the center weldment of the main frame. Note ensure that the long bolt on each side goes at the 1 O'Clock position facing the weldment. This insures that the retention plug retaining nut can be installed correctly. DET-017,018.
8. Torque and safety wire-tie bolts on the pitch arm.DET-018

9. Elevate the main frame and cockpit using the transport dolly. See DET-010,008

10. Locate the lift jack assemblies, the one with an extension welded to the jack tower shaft is positioned in the left side, bar extension facing inward on A frame. The other on the right side. The jackshaft assemblies can be positioned by lifting slightly on pitch lift blocks, tilt top of jackshaft inward and push gearbox at the base into position. Tilt top back to center. Fasten to lift blocks and install guide plates at the base. See DET-043

11. Stabilize the A-Frames and slide them onto each pitch shaft. Ensure that the thrust rings are on the shafts loosely prior to application of the A-Frames. DET-008

12. Locate power slip ring and thrust ring. Position thrust ring onto right pitch shaft. Feed the cabling from power rings through the pitch shaft into the center weldment area. Secure slip ring with set screws. See DET-044

13. Locate and position tail stand at rear of unit. Have one person control platform motion while lowering transport dolly. When dolly is all the way down adjust platform position in pitch and remove dolly from area. Place tail stand under tail boom H frame. **Note:** If platform is nose heavy place a blanket or other soft material on floor under the cockpit area and allow cockpit to rest on the floor. The counterweight needs AC power to reposition and balance. DET-010

14. Position transport dolly on left side of A frame with pitch motor facing A frame in the center near pitch shaft. Using the current approved lifting method attach and lift pitch motor from transport dolly up and near the pitch shaft. Install thrust ring onto the pitch shaft. Position pitch motor even with the pitch shaft by looking through center of its gearbox. Slide motor onto pitch shaft and remove lifting device. While another person lifts and moves the motion platform in pitch, level or move in such a way so that the pitch keyway can be installed fully. Place motion platform onto tail stand. Secure motor and key stock by placing split ring over and into grooves at the pitch shaft end. Remove transport dolly from area. See DET-011
15. Locate and install pitch signal slip ring. Feed the cables through center of shaft into center weldment. Secure rings using set screws provided. Install slip ring strain bracket over rings onto pitch gearbox. Secure to gearbox and slip ring torque arm. See DET-011

16. Locate and install cabinetry onto all A frames. See DET-012

17. Locate and position control cabinet. DET-006

18. Locate and position Kiosk cabinet. DET-006

19. Locate and install Interface board onto inside left front cabinet wall. See DET-045

20. Locate and install cockpit power strip to left rear outer cabinet support frame. See DET-046

21. Locate and install lift center shaft assembly. See DET-047

22. Locate and install Lift motor and drive shaft assemblies. Position and plug motor and brake power leads into respective power box connections. See DET-048

23. Position and connect respective drive motor cables to power box. See DET-001,002

24. Connect and install all center weldment cabling secure using tie wraps. Install Roll motor power and brake connections. See DET-003

25. Locate the encoders and respective brackets (three). Install brackets on the pitch and roll motors. Install lift bracket onto later support leg left side. Position encoder between the bracket legs, push encoder all the way onto the shaft, back out 1/8" and tighten the encoder set screws (two each encoder). Install respective cannon plug to the encoder. See DET-004

26. Locate and assemble the entry steps. Position in front and under cockpit. See DET-013

27. Locate and assemble the front support stand. Position per drawing and bolt to the entry steps. See DET-013

28. Measure to position entry steps and front support stand per drawing. Install the base restraint brackets, one each side per drawing. See DET-005

29. Locate all cabling from control console to the ride and install. See DET-002

30. Locate and install all cabling from kiosk to power and control console interface. See DET-002

31. Connect all cables from the pitch signal slip ring to the interface board, control console, and cockpit power strip (115 VAC). DET-002,020,019,021

32. Position and connect all sensor cables to the interface board. Match up plug and receptacle numbers. DET-020

33. Position and connect analog feedback cable from power box to the interface board. DET-020

34. Locate and position Main AC power cord. Connect to the power box but do not plug into outlet on wall at this time. (208 VAC, 3 phase). DET-006,001

35. Position any extension cords from control console and kiosk to the wall outlets. Connect to power source and verify power is available. DET-006

36. Power up control console. Turn power strip "ON", turn UPS "ON" green light on, turn computer "ON", turn monitor "ON". Allow computer to initialize. Check to see that there are no faults on the computer.

37. Locate and install TV on top of left cabinetry. Secure with screws provided. Connect AC power cord and video feed cable to the TV. DET-007

38. On computer initiate a defrag of C drive. Once completed initialize the program.

39. Turn Pre-amp and Main amp to "ON". Set volume to min and then slowly raise to normal. Audio must be heard from cockpit speakers and outside speakers if installed. If sound is good turn volume down.

40. Shut program down but leave computer "ON".

41. Plug main power into wall receptacle . This makes power available to the power box.

42. Lower, latch and lock the canopy.

NOTE: During the next step should there be any movement immediately push E-Stop to OFF. Slight motion in roll may happen when brake to is released by program.

43. Pull out E-Stop on side of control console, Inverters should initialize, alert window appear on desktop of CPU and then go away, you should have heard the brake solenoids cycle on the pitch and roll motors.

NOTE: When raising unit for the first time, have people watch both slip ring sides to insure that during raising phase none of the cables bind anywhere. Should cable bind, immediately STOP the raising and clear the problem.

44. Turn to Technical Manual page 7 paragraph 2-3 and perform a motor initial phase test to verify all motor connections and that motor rotation is correct. When all tests are completed successfully, lower unit to the support stands.

45. Initiate the program using the normal startup procedures in Operations Manual, page 4 paragraph 2-2. Run several test cycles to verify performance of the unit.

46. Perform the final leveling and squaring of the unit. When squared and level anchor the base C channels using the anchors or glue pads provided. See DET-008

47. Perform another cycle test after unit anchoring procedure is completed.

48. Correctly route and detail all cabling, install walkway covers over floor cabling. Install and verify all protective panels on the lift system and side of A frame cabinetry. DET-009

49. Partially raise the unit .Install the tail boom cover and secure with two plastic covered wings nuts and washers lower rear of cover. Insure wing nuts are tight. Lower unit back down. DET-010

50. Install the Tail enclosure panel over center weldment. DET-011

51. Complete the field installation checklist, operator training checklist and maintenance training checklist.

52. Verify ID plates are posted inside lower door of the control console and patent label is posted on cabinetry.

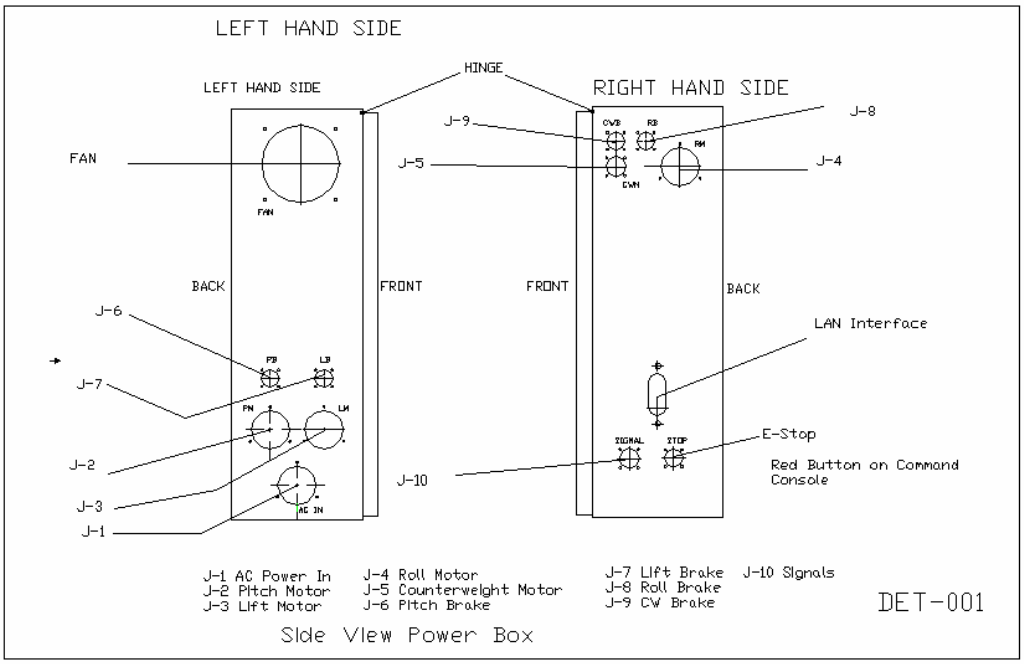
LEFT HAND SIDE
LEFT HAND SIDE
HINGE
RIGHT HAND SIDE
FAN
J-9
J-8
J-5
J-4
BACK
FRONT
FRONT
BACK
J-6
LAN Interface
J-7
E-Stop
J-2
J-10
Red Button on Command Console
J-3
J-1
J-1 AC Power In
J-2 Pitch Motor
J-3 Lift Motor
J-4 Roll Motor
J-5 Counterweight Motor
J-6 Pitch Brake
J-7 Lift Brake
J-8 Roll Brake
J-9 CW Brake
J-10 Signals
DET-001
Side View Power Box

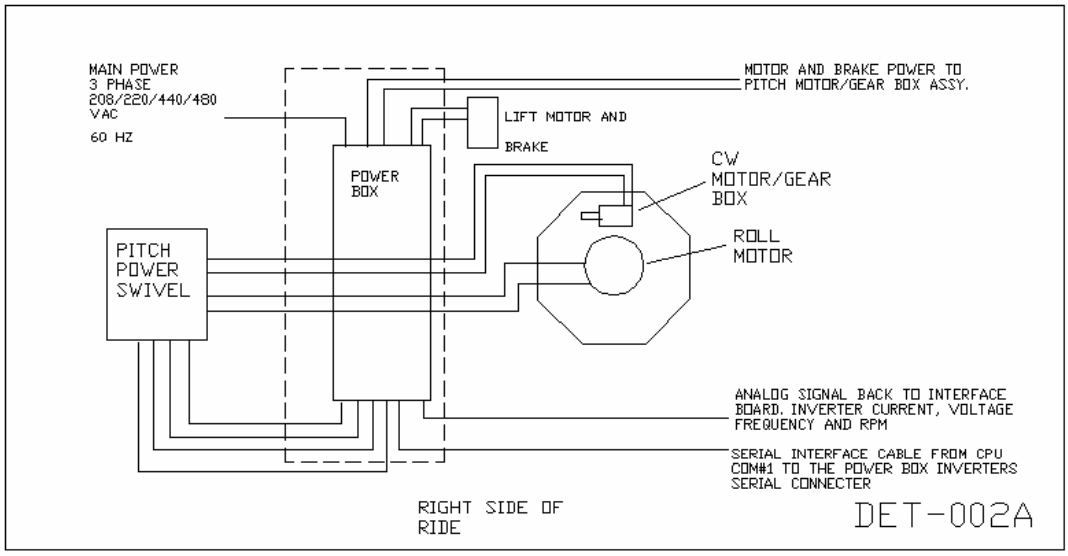
MAIN POWER
3 PHASE
208/220/440/480
VAC
60 HZ
MOTOR AND BRAKE POWER TO
PITCH MOTOR/GEAR BOX ASSY.
LIFT MOTOR AND
BRAKE
POWER
BOX
CW
MOTOR/GEAR
BOX
ROLL
MOTOR
PITCH
POWER
SWIVEL
ANALOG SIGNAL BACK TO INTERFACE
BOARD. INVERTER CURRENT, VOLTAGE
FREQUENCY AND RPM
SERIAL INTERFACE CABLE FROM CPU
COM#1 TO THE POWER BOX INVERTERS
SERIAL CONNECTER
RIGHT SIDE OF
RIDE
DET-002A

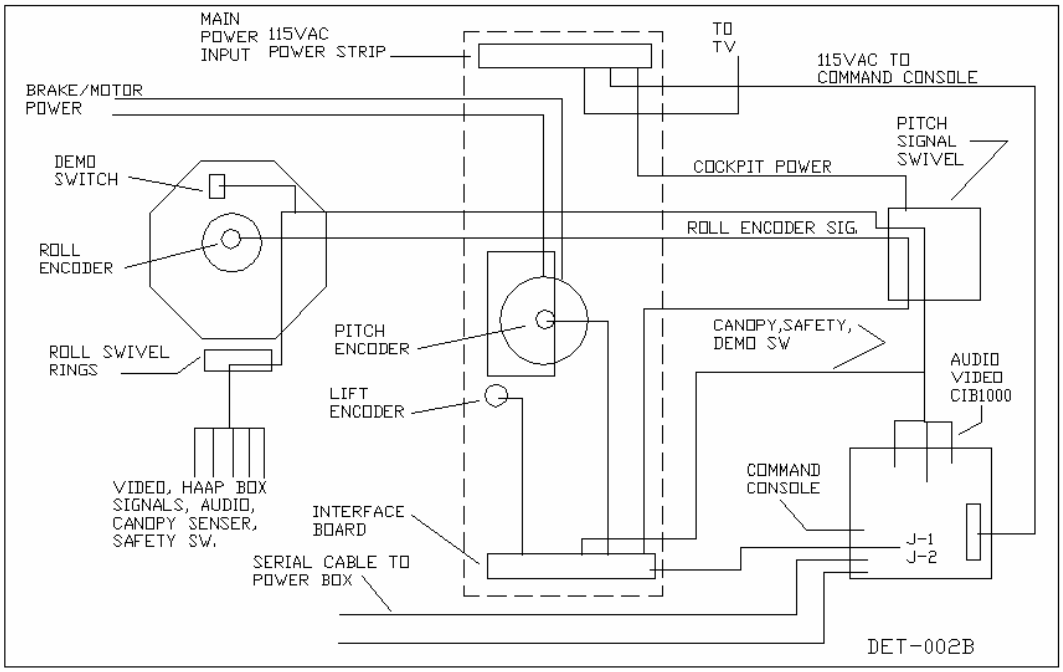
MAIN
POWER 115VAC
INPUT POWER STRIP
TO
TV
115VAC TO
COMMAND CONSOLE
BRAKE/MOTOR
POWER
PITCH
SIGNAL
SWIVEL
DEMO
SWITCH
COCKPIT POWER
ROLL ENCODER SIG.
ROLL
ENCODER
PITCH
ENCODER
CANOPY,SAFETY,
DEMO SW
ROLL SWIVEL
RINGS
AUDIO
VIDEO
CIB1000
LIFT
ENCODER
COMMAND
CONSOLE
VIDEO, HAAP BOX
SIGNALS, AUDIO,
CANOPY SENSER,
SAFETY SW.
INTERFACE
BOARD
J-1
J-2
SERIAL CABLE TO
POWER BOX
DET-002B

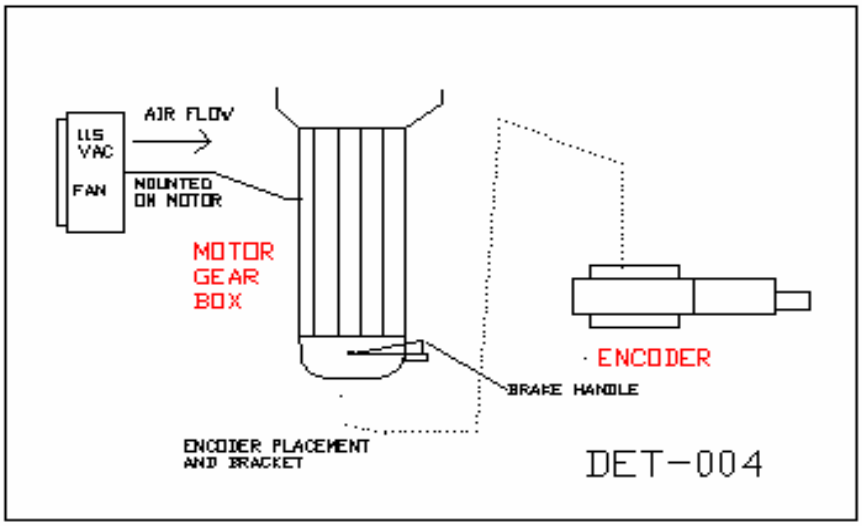
AIR FLOW
115
VAC
FAN
MOUNTED
ON MOTOR
MOTOR
GEAR
BOX
ENCODER
BRAKE HANDLE
ENCODER PLACEMENT
AND BRACKET
DET-004

REVISIONS

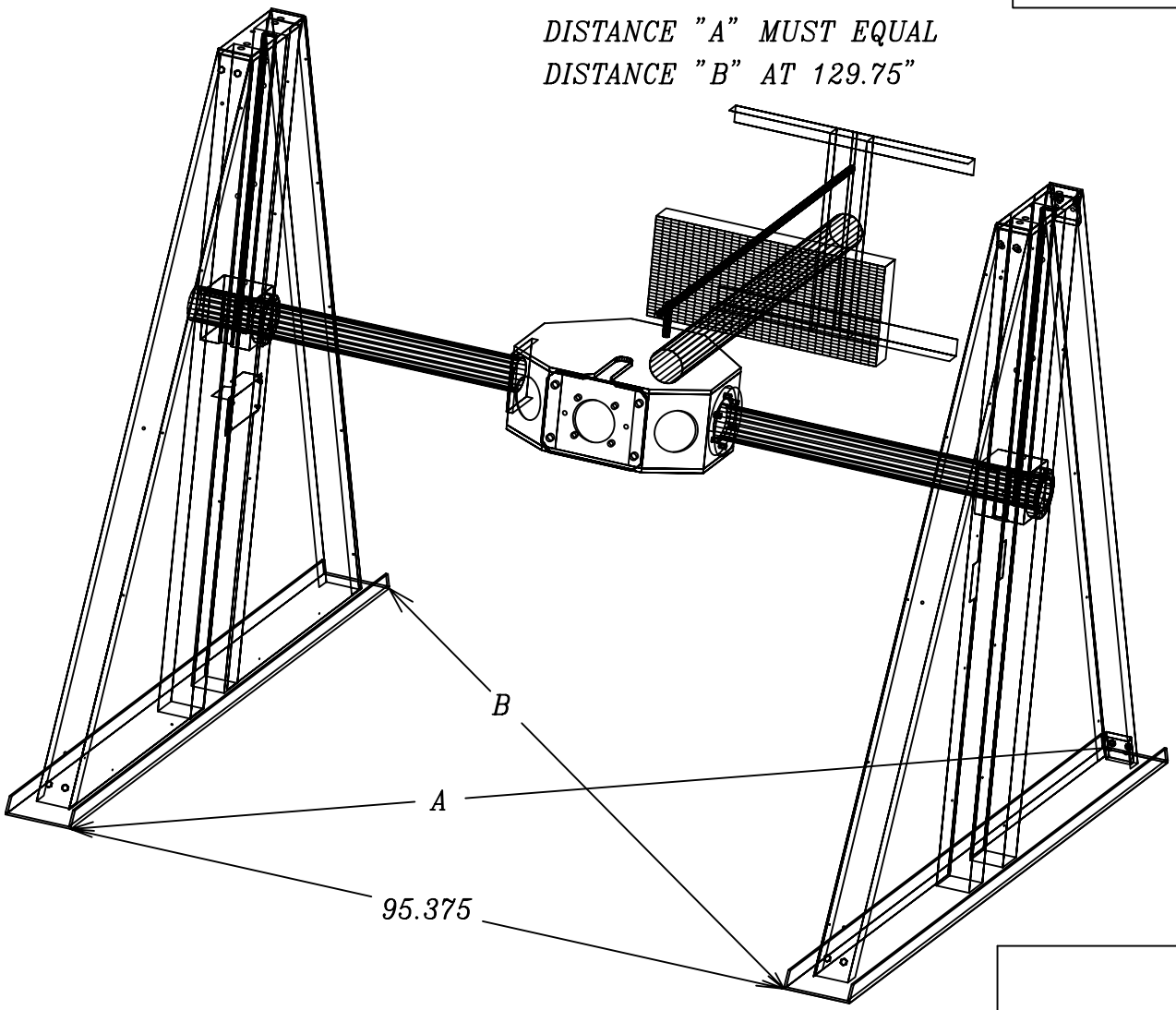

SQUARING OF UNIT

Seat Frame & Canopy Removed For Clarity

MAXFLIGHT CORPORATION
750 AIRPORT ROAD
LAKEWOOD, NJ 08701

TITLE	Squaring of Electric Machine		
DOCUMENT NUMBER	DET-006		
SIZE	DRAWN BY: WWB		REV
	CHECKED BY:	APPROVED BY:	
DATE	July 25, 2001		

REVISIONS

1. FRONT PANELS
2. REAR PANELS
3. TOP PANELS
4. 5/16 FLAT ALLEN COUNTERSUNK SCREWS
5. TOP PANEL HINGES
6. CABINETRY OUTRIGGERS

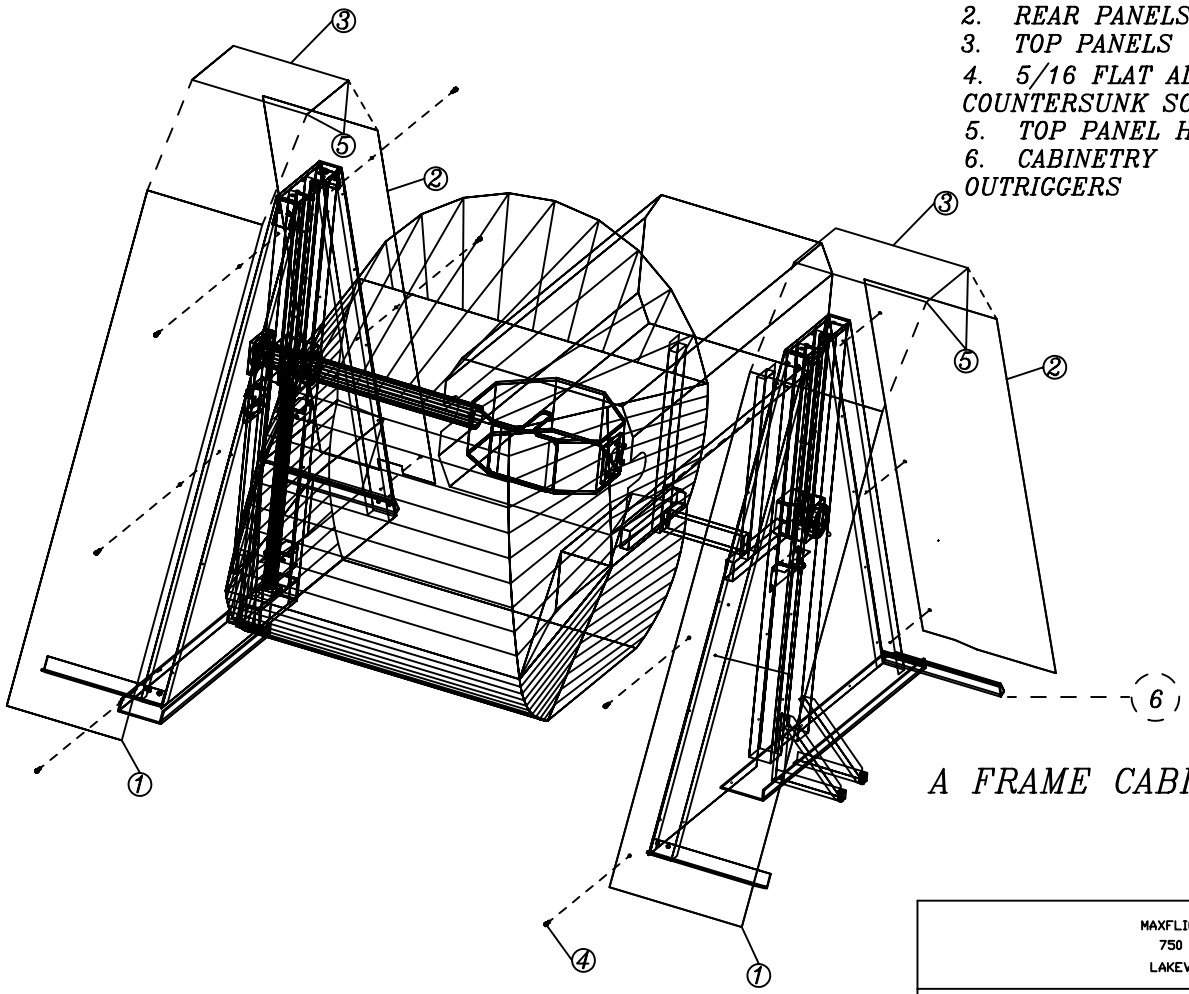

A FRAME CABINETRY

PLATFORM REMOVED FOR CLARITY

MAXFLIGHT CORPORATION
750 AIRPORT ROAD
LAKEWOOD, NJ 08701

TITLE	'A' Frame Cabinetry Placement		
DOCUMENT NUMBER	DET-007		
SIZE	DRAWN BY: WWB		REV
	CHECKED BY:	APPROVED BY:	
DATE	July 25, 2001		

REVISIONS

TAIL STAND/TAIL BOOM COVER

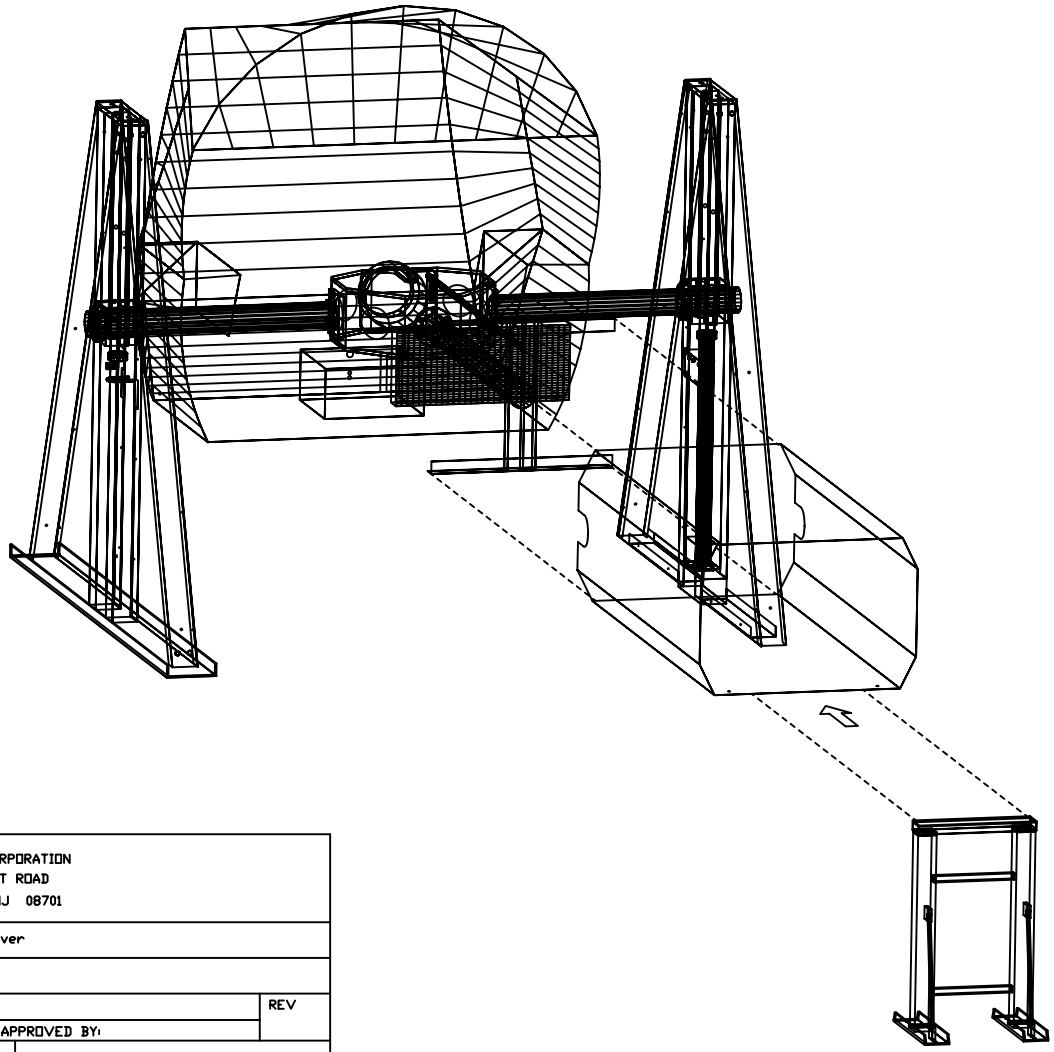

MAXFLIGHT CORPORATION 750 AIRPORT ROAD LAKEWOOD, NJ 08701			
TITLE	Tail Stand Cover		
DOCUMENT NUMBER	DET-008		
SIZE	DRAWN BY: WWB		REV
	CHECKED BY:	APPROVED BY:	
DATE	July 25, 2001		

REVISIONS

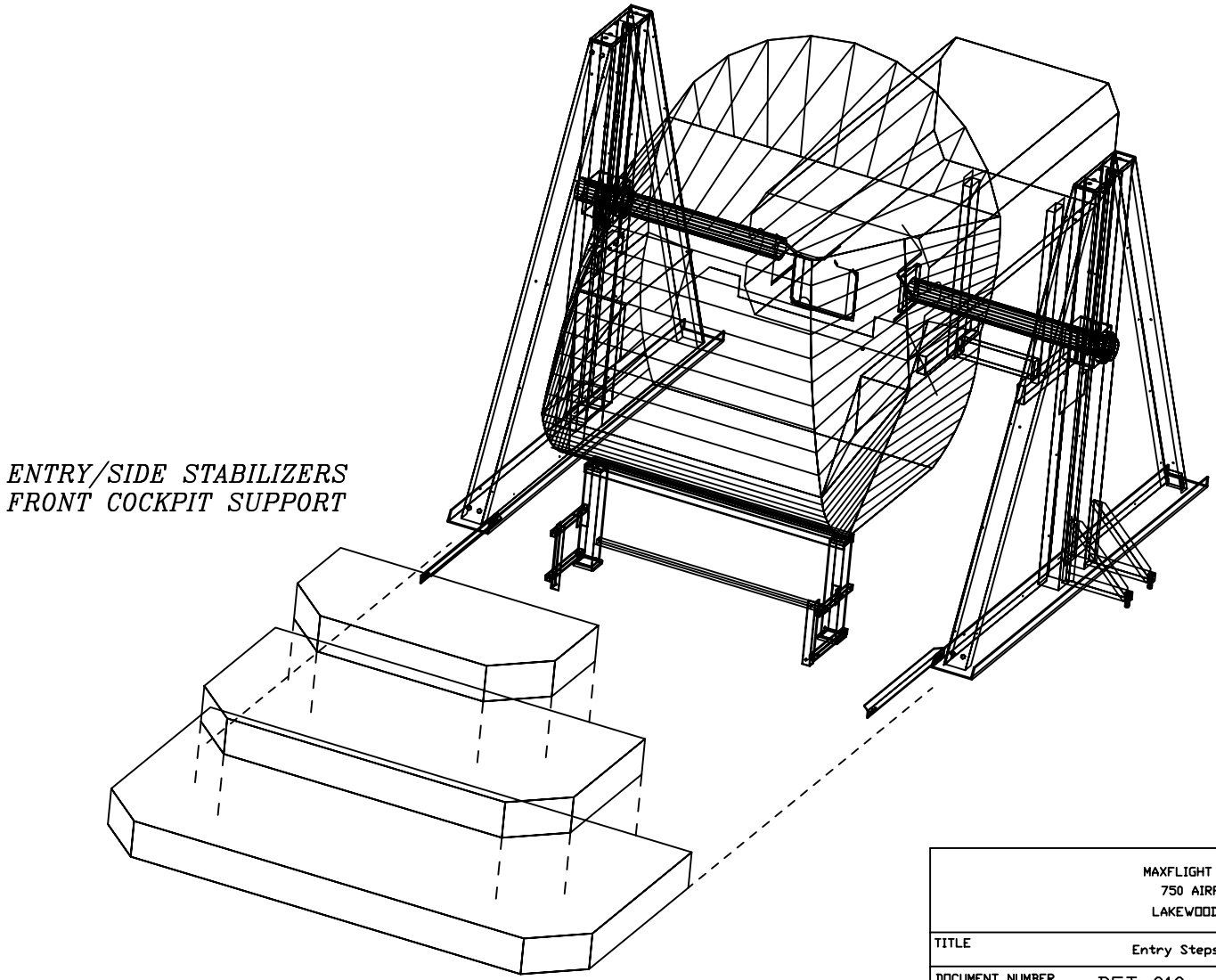

MAXFLIGHT CORPORATION
750 AIRPORT ROAD
LAKEWOOD, NJ 08701

TITLE	Entry Steps, Front Stand and Side Stabilizers		
DOCUMENT NUMBER	DET-010		
SIZE	DRAWN BY: WWB		REV
	CHECKED BY:	APPROVED BY:	
DATE	July 25, 2001		

REVISIONS

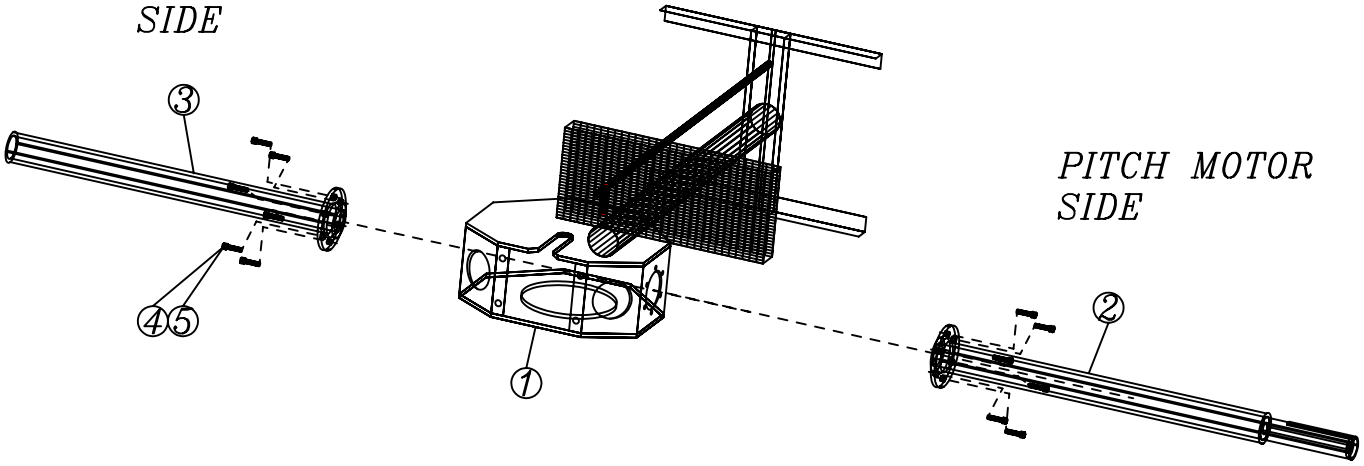

Seat Frame & Canopy Removed For Clarity

PITCH SHAFT AND CENTER WELDMENT LAYOUT

MAXFLIGHT CORPORATION
750 AIRPORT ROAD
LAKEWOOD, NJ 08701

TITLE	Pitch Shafts and Center Weldment Layout		
DOCUMENT NUMBER	DET-011		
SIZE	DRAWN BY: WWB		REV
	CHECKED BY:	APPROVED BY:	
DATE	July 25, 2001		

REVISIONS

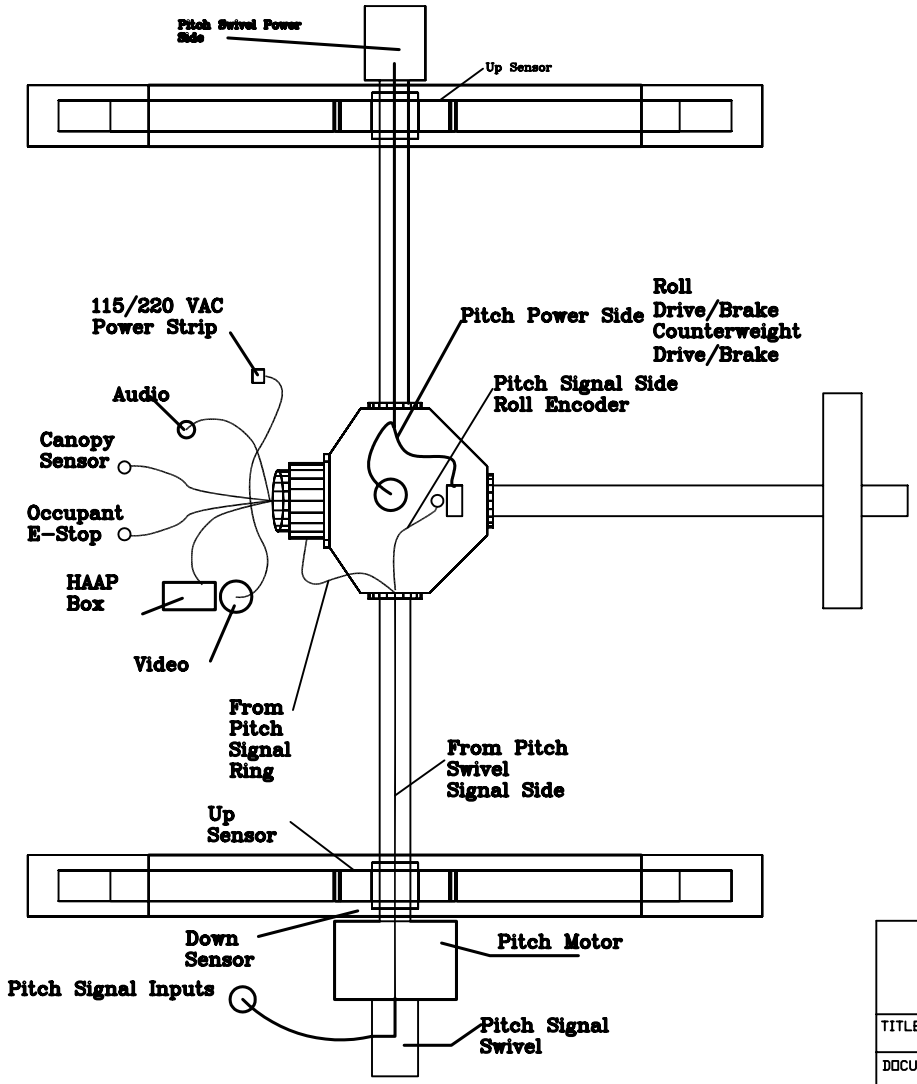

MAXFLIGHT CORPORATION
750 AIRPORT ROAD
LAKEWOOD, NJ 08701

TITLE	Cable/Wire Routing to from Center wweldment		
DOCUMENT NUMBER	DET-018		
SIZE	DRAWN BY: WWB		REV
	CHECKED BY:	APPROVED BY:	
DATE	July 25, 2001		

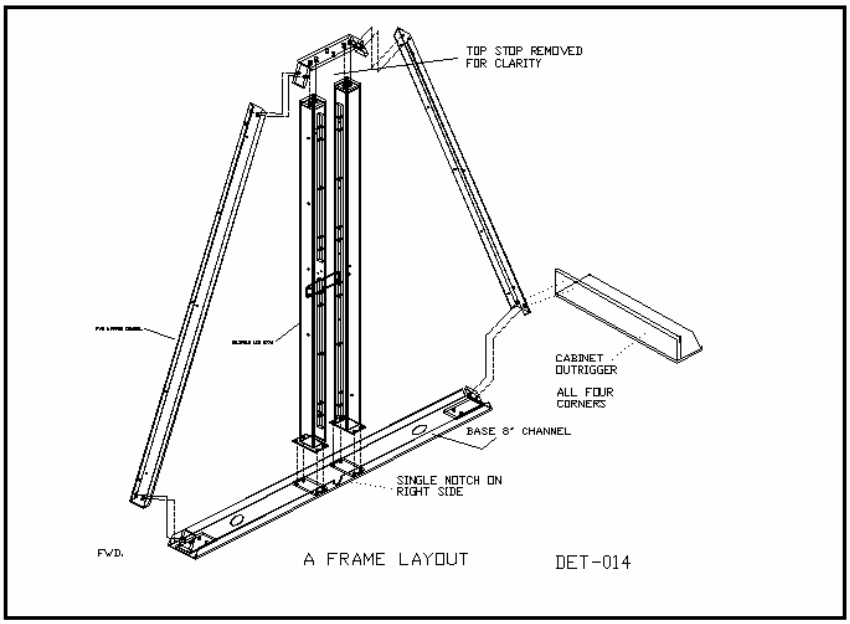
TOP STOP REMOVED
FOR CLARITY
CABINET
OUTRIGGER
ALL FOUR
CORNERS
BASE 8" CHANNEL
SINGLE NOTCH ON
RIGHT SIDE
FWD.
A FRAME LAYOUT
DET-014

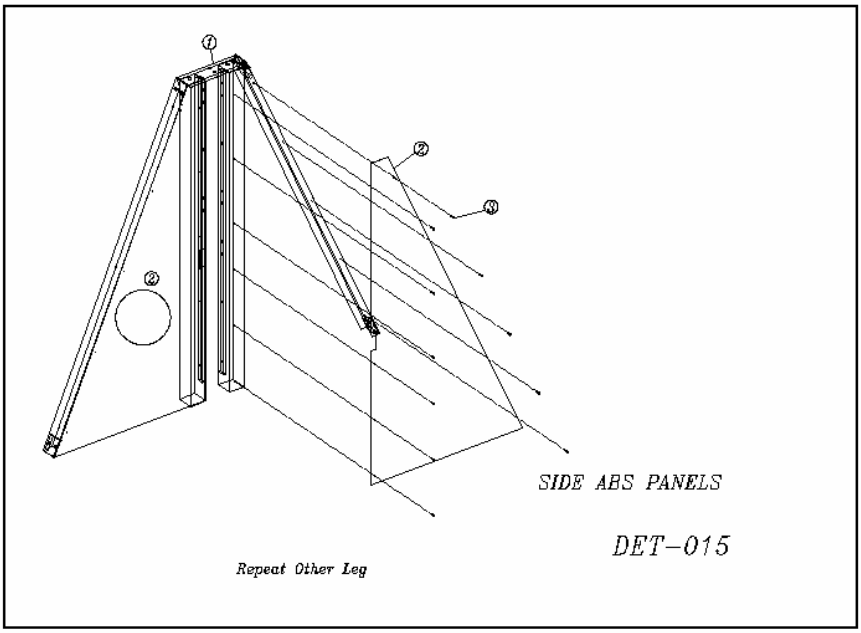
1
2
3
4
SIDE ABS PANELS
DET-015
Repeat Other Leg

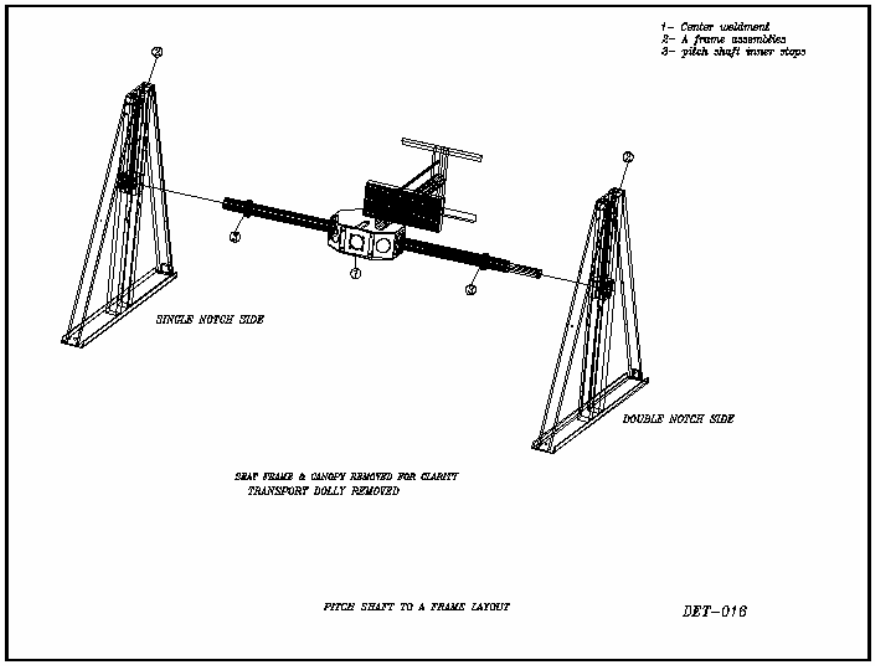
1- Center weldment
2- A frame assemblies
3- pitch shaft inner stops
SINGLE NOTCH SIDE
DOUBLE NOTCH SIDE
SEAT FRAME & CANOPY REMOVED FOR CLARITY
TRANSPORT DOLLY REMOVED
PITCH SHAFT TO A FRAME LAYOUT
DET-016

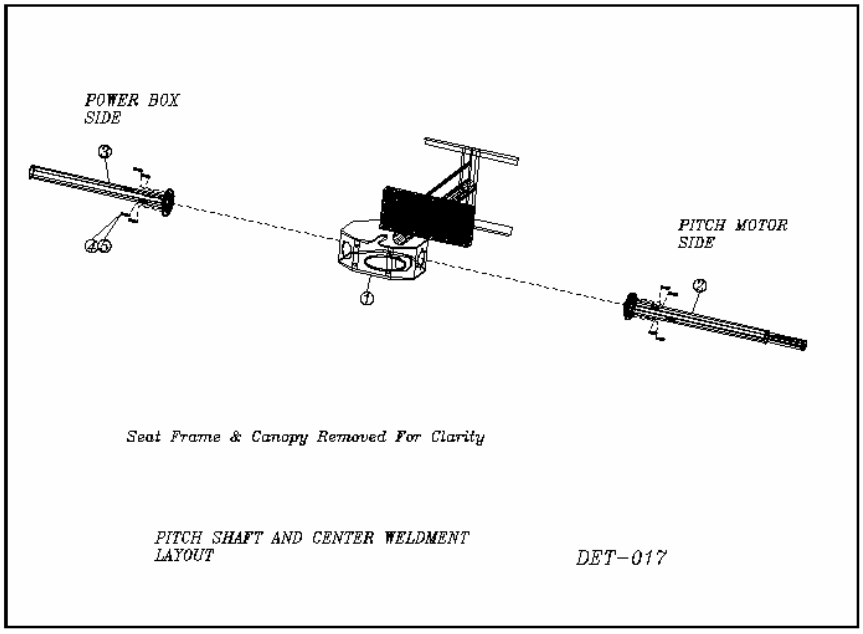
POWER BOX
SIDE
PITCH MOTOR
SIDE
Seat Frame & Canopy Removed For Clarity
PITCH SHAFT AND CENTER WELDMENT
LAYOUT
DET-017

Lube Directions

1. Keyways both sides White lithium grease WEEKLY
2. Pitch Rotation bearings both sides Spray lube to keep moist. MONTHLY
3. Tail shaft for counterweight. Lube with white lithium grease. MONTHLY
4. Counterweight Drive Screw. Bearing grease. Dabs in four places MONTHLY.
5. Roll Hub rotation bearing. Spray Lube MONTHLY.

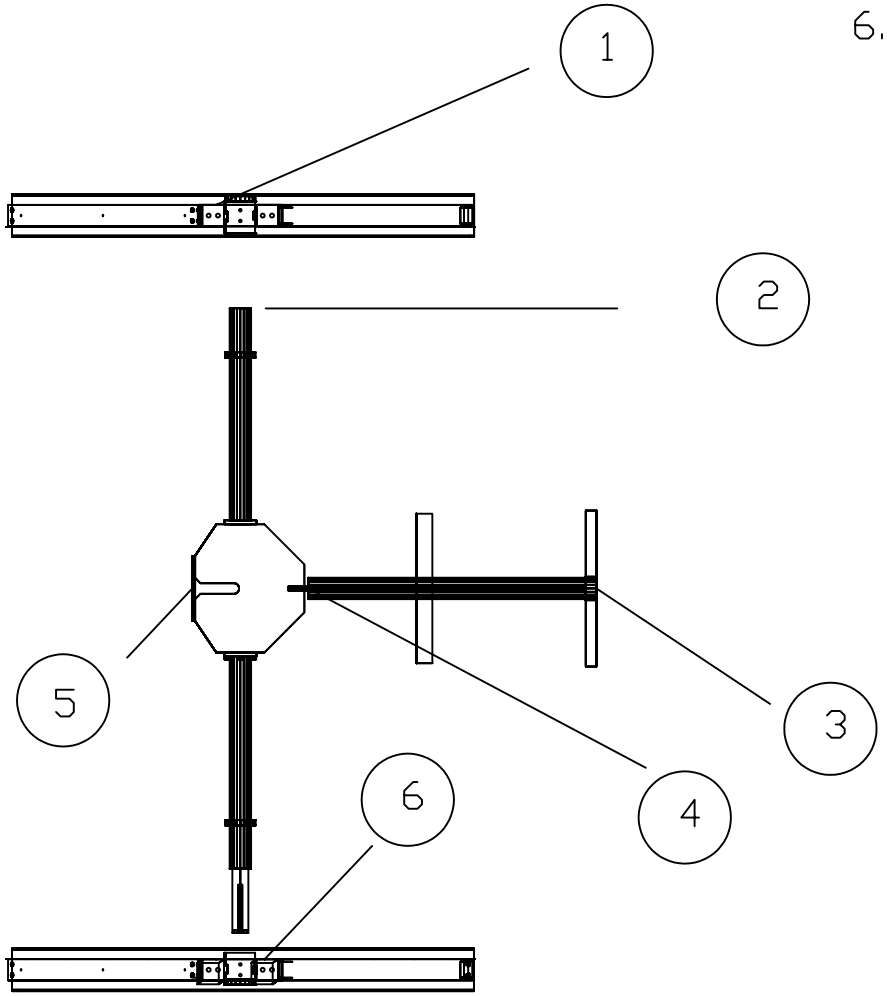

6. Lift Jack Drive Screw. 10W-30 engine oil as needed to keep oil film on screw. CHECK DAILY- LUBE AS NEEDED.

Revised: 13 July 2005

Electric Machine Lube Chart

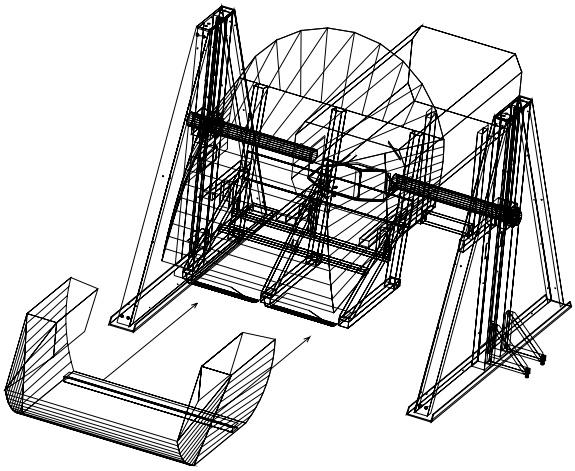

LOWER HALF OF COCKPIT
FIBERGLASS

DET-040

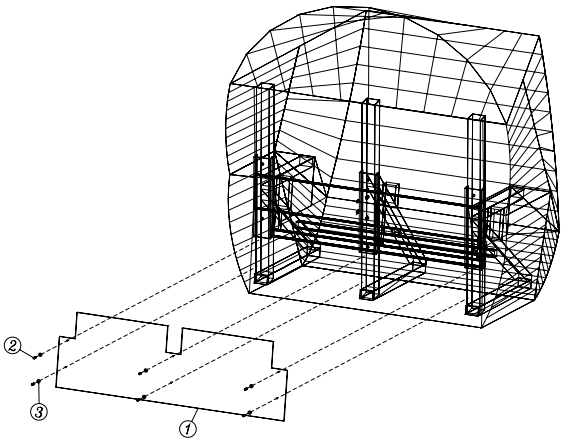

LOWER REAR COCKPIT
ABS PANEL

DET-041

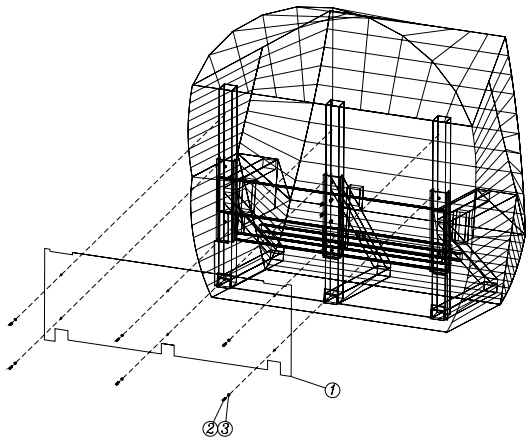

UPPER REAR COCKPIT
ABS PANEL

DET-042

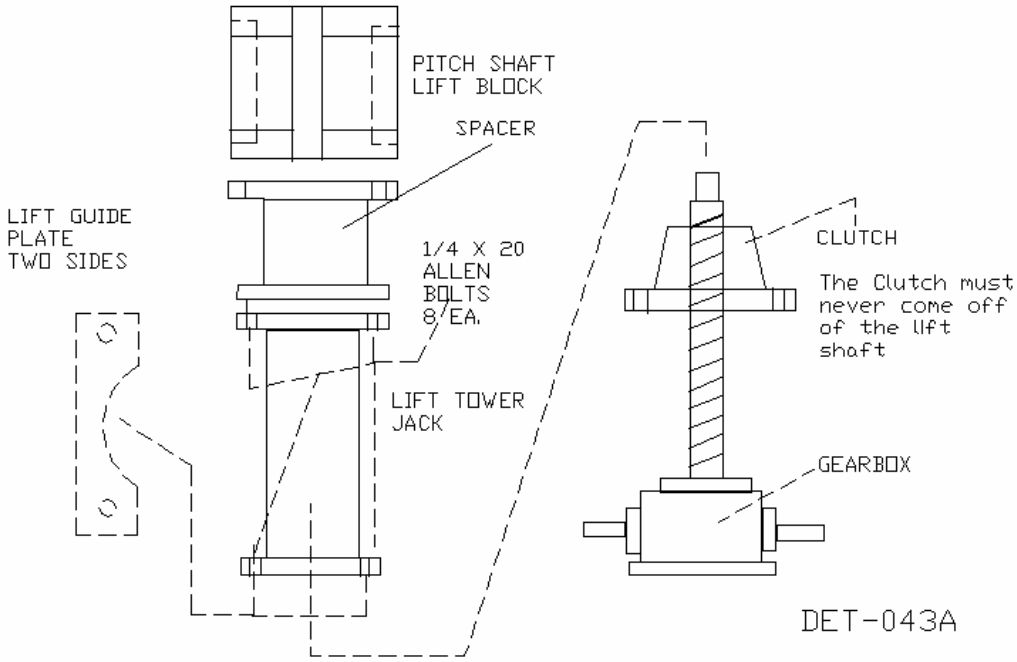

DET-043A

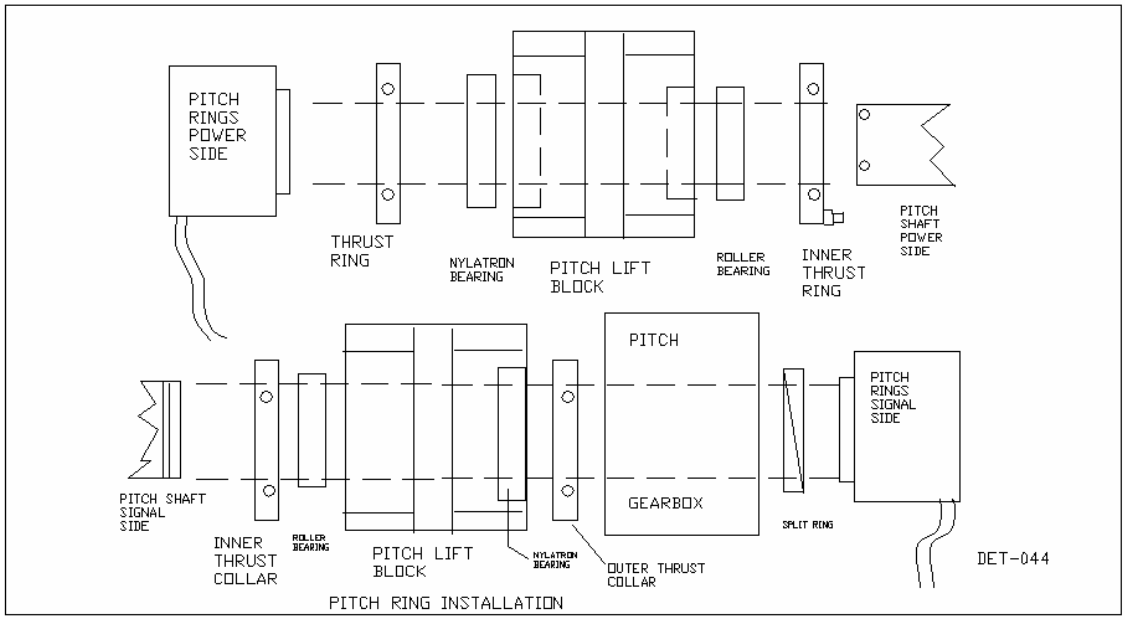
PITCH RINGS POWER SIDE
THRUST RING
NYLATRON BEARING
PITCH LIFT BLOCK
ROLLER BEARING
INNER THRUST RING
PITCH SHAFT POWER SIDE
PITCH
GEARBOX
PITCH RINGS SIGNAL SIDE
PITCH SHAFT SIGNAL SIDE
INNER THRUST COLLAR
ROLLER BEARING
PITCH LIFT BLOCK
NYLATRON BEARING
OUTER THRUST COLLAR
SPLIT RING
DET-044
PITCH RING INSTALLATION

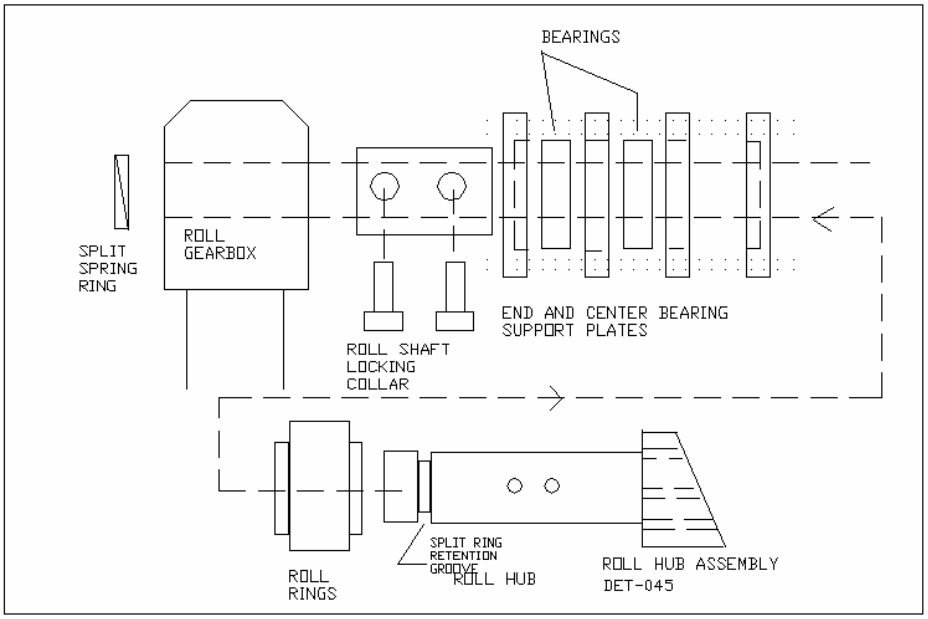
BEARINGS
SPLIT SPRING RING
ROLL GEARBOX
END AND CENTER BEARING SUPPORT PLATES
ROLL SHAFT LOCKING COLLAR
SPLIT RING RETENTION GROOVE
ROLL HUB
ROLL RINGS
ROLL HUB ASSEMBLY
DET-045

REVISIONS	Date:	App:
	27 Sep 03	

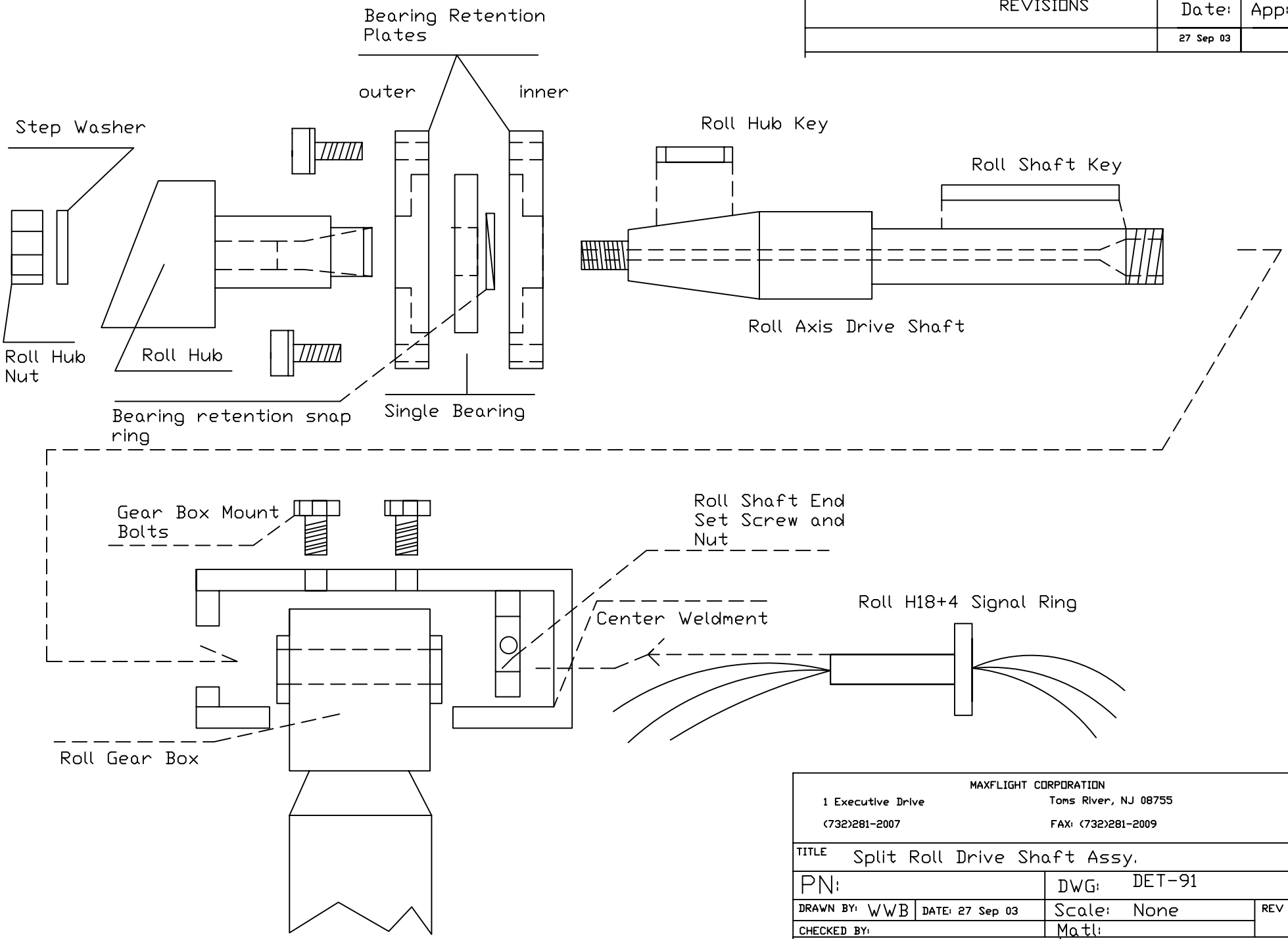

MAXFLIGHT CORPORATION
1 Executive Drive
Toms River, NJ 08755
(732)281-2007
FAX: (732)281-2009

TITLE	Split Roll Drive Shaft Assy.		
PN:		DWG:	DET-91
DRAWN BY: WWB	DATE: 27 Sep 03	Scale: None	REV
CHECKED BY:		Matl:	
APPROVED BY:		DATE:	

Omnitech Interface Motion cControl Board

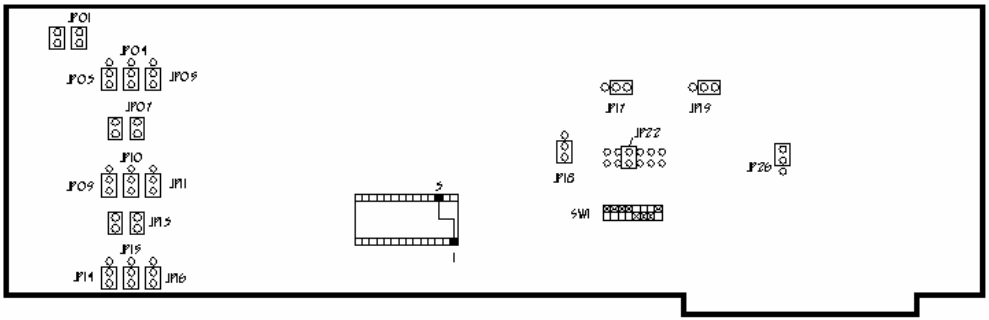

Computer Interface Jumper / Dipswitch Settings

DET-050

APPENDIX B

INSTALLATION AND PERFORMANCE TESTING CHECKLIST

1. PASSENGER SEATING AREAS

- ❑ Check the condition of the cockpit unit for fiberglass body damage or deterioration.
- ❑ Visually inspect the cockpit unit for loose or missing fasteners.
- ❑ Visually inspect the seat unit for damage, deterioration and security.
- ❑ Visually inspect for sharp or protruding objects in the passenger areas.
- ❑ Check the condition of the floor surface and mats.
- ❑ Inspect the lap belts (primary restraint) and related operating mechanisms for proper function, damage and the security of mounting fasteners.
- ❑ Inspect the overhead restraints (secondary restraint) for proper function and condition.
- ❑ Inspect the steps and thresholds for damage or tripping hazards.
- ❑ Check the cockpit door hinges and gas spring cylinders for condition and proper operation.
- ❑ Inspect the seat for loose or missing fasteners and appropriate safety wire.
- ❑ Inspect the cockpit frame for cracks or deformation.

2. Frame and Base

- ❑ Visually inspect all structural members on the tail boom, A-Frame and the cockpit attachment point for bent/deformed brackets, cracks or damage in the frame members or weldments.
- ❑ Check the frame fasteners for appropriate grade, retaining wire and proper installation.
- ❑ Check the counterweight and rail for condition and security.
- ❑ Check for loose or missing fasteners on the A-Frame and structure.
- ❑ Visually inspect the anchor points and verify that the A-Frame has not moved.
- ❑ Check for abnormal wear or contact between structural components.
- ❑ Visually inspect pivot points and joints for obvious wear.
- ❑ Check the frame and base for excessive dust buildup and debris.
- ❑ Inspect the tail boom shroud for security.
- ❑ Check the pine tree fasteners in the A-Frame panels for security.
- ❑ Inspect the roll ring system for wear and security.
- ❑ Inspect the pitch rings and torque arms for security and wear.

3. Projection and Audio Equipment

- ❑ Visually inspect the projection equipment and speaker mounting fasteners.
- ❑ Check the fans and ducting for condition and security.
- ❑ Check the projector for proper operation, cleanliness and security.
- ❑ Check speakers and audio equipment for security and proper functioning.
- ❑ Check the projection controls for proper operation.

- ❑ Check the projection screen for proper mounting, cleanliness and security.

4. Electrical Equipment

- ❑ Check the ride related distribution equipment.
- ❑ Check for proper use of GFCI's and grounding.
- ❑ Visually inspect the lighting for proper operation and damage protection.
- ❑ Visually inspect the condition of the conduit, wiring and connections.
- ❑ Check for proper condition, operation and labeling of control stations.
- ❑ Check for accessibility for authorized personnel and guarding against guest access.
- ❑ Check for proper operation of the control system in the normal operation mode.
- ❑ Check the monitor and keyboard for normal operation and condition.
- ❑ Inspect the electrical safety guards and warning signs.
- ❑ Check the electrical connections in the power box for security.
- ❑ Verify the proper operation of the limit sensors. (2 up, 1 down, 1 canopy and 1 demo sensor.
- ❑ Check the slip rings for any external damage. Inspect cabling going to and coming from rings for damage.
- ❑ Check Power Relay Contactor inside power box for security and operation.
- ❑ Check all connections inside the power box for security and/or damage.
- ❑ Check all inverters for proper mounting.
- ❑ Check power box cover for warning label.
- ❑ Check condition and operation of power box vent fan.

- ❑ **5. Operational Tests**
- ❑ Test the emergency stop button at the operator console and the Occupant Panic Switch inside the cockpit.
- ❑ Test the operation console controls (CPU menu driven) for proper operation. During start-up check for any error indications or signs that the computer is not functioning correctly.
- ❑ Test the operation of the fire alarm interface (alarm should indicate E-stop mode, if installed).
- ❑ Test the raise and balance functions.
- ❑ Test the door interlock switch (Canopy Open Sensor) for proper operation.
- ❑ Test the house lighting for correct operation.
- ❑ Test the manual quick release of the harness.
- ❑ Check the harness release lever for proper operation.
- ❑ Check the computer diagnostic functions.

6. Safety Systems and Devices

- ❑ Check for proper operation of the emergency lighting and battery packs.
- ❑ Check the condition, content and location of all warning and information signs.
- ❑ Check for classical hazard guarding in the guest areas.

- ❑ Check the fire extinguishers for condition and location.
- ❑ Visually check the lap belt for damage and deterioration.
- ❑ Visually check the secondary restraint harness for damage and deterioration.
- ❑ Review the passenger restrictions for compliance to the manufacturer's recommendations.
- ❑ Check the building fire alarm system for activation devices and audible alarms in the ride area.
- ❑ Check the evacuation routes for proper clearances and accessibility.

7. Queue and Holding Areas

- ❑ Visually inspect the queue, walls and fencing for security and damage.
- ❑ Visually inspect the holding areas and pre-show areas for hazards to guests.
- ❑ Check for proper queuing techniques.
- ❑ Check for adequate lighting in the guest traffic areas.
- ❑ Visually inspect for slip, trip and fall hazards in the queue area.
- ❑ Check for sharp or protruding objects in or around the queue area.
- ❑ Check the condition, content and location of all signs.
- ❑ Check the condition and security of the stairs/platform.

8. Building Fire Alarm Interface (If installed)

The VR2000 is equipped with an Occupants Panic Stop capability, which is used to stop the ride at the occupants' request. The circuit is paralleled into the NO contact of the fire alarm system. In case of a fire, the facility's fire alarm system will trip, closing the NO contact, thereby initiating the "Panic Stop" circuit. Upon circuit activation, the system will return to the "Home" position, the video image will freeze and the sound will stop. If power remains, the platform will be lowered to the platform using the normal operating procedure. If power fails, the system will be lowered to the platform using the "**without power**" procedure of **paragraph 2-13C** of the Operators Manual **page 7.** Also, upon lowering the unit to the platform, the attendant will manually release the hood and manually release the restraint harness by removing the hold pin and manually raise the harness off of the patron. This procedure requires approximately 30 seconds.